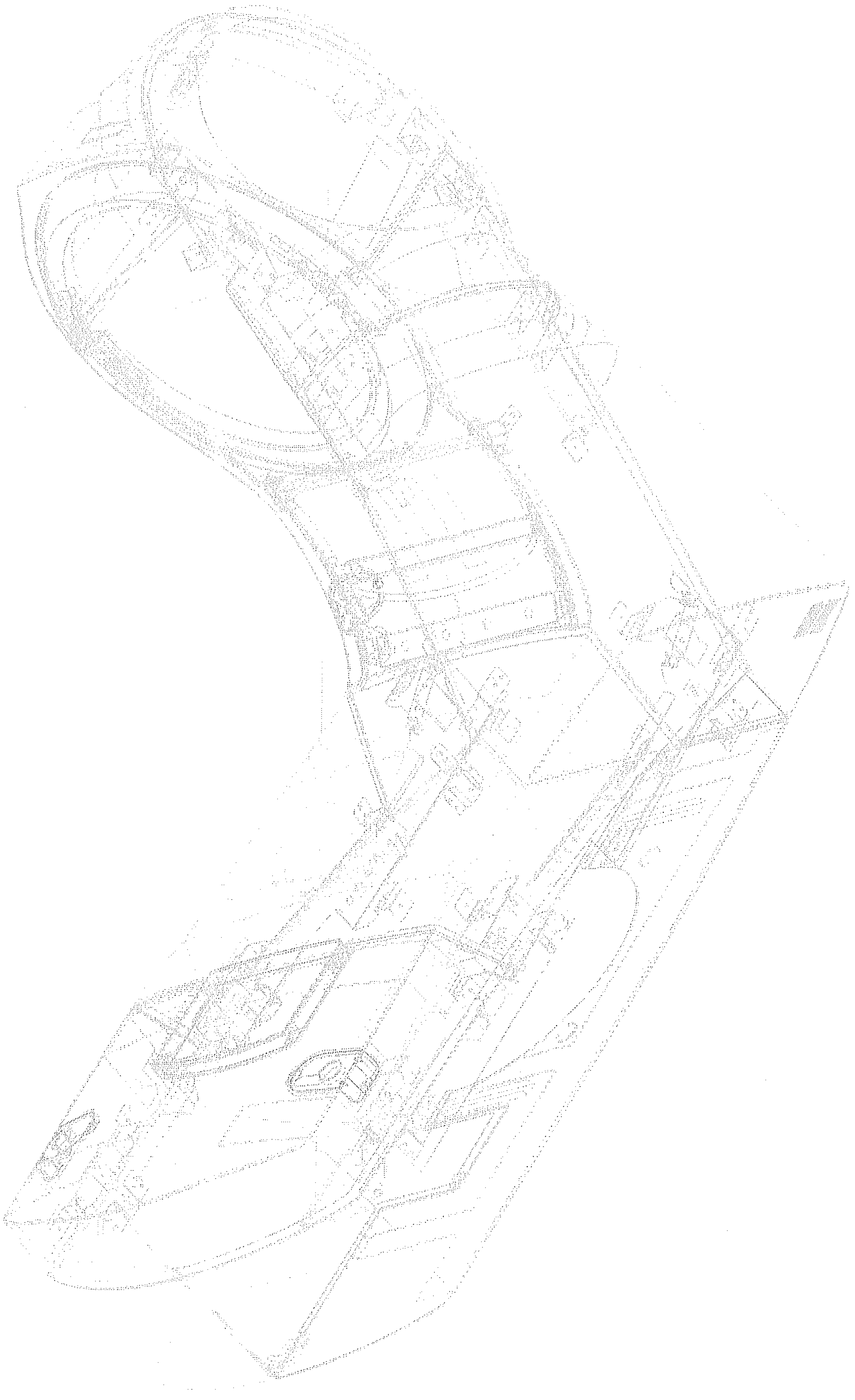

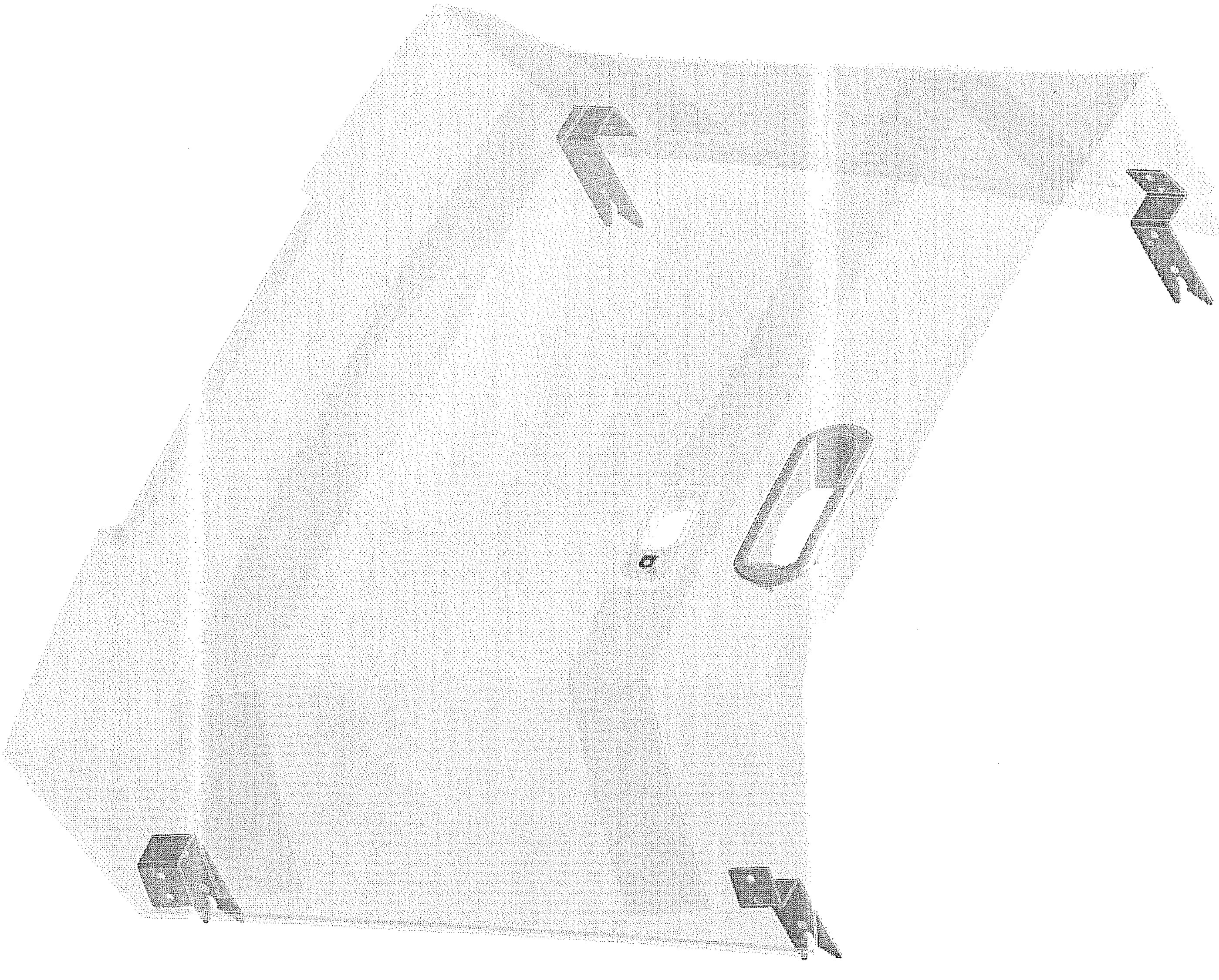

NOTES:

1. PROVIDE PROTECTIVE CONTAINER AND IDENTIFY IT WITH PART NO. AND APPLICABLE REVISION LEVEL.
2. DIMENSIONAL LIMITS APPLY AFTER PLATING (OR OTHER FINISH).

③ PERMANENTLY MARKED PART NUMBER AND REVISION APPROXIMATELY WHERE SHOWN.
PART NUMBER KEY SGH143 (WAUSAUKEE) B (SIEMENS REVISION)

4. TOLERANCES FOR METAL PARTS, UNLESS OTHERWISE NOTED:

HOLE TO HOLE ±.004"
EDGE TO EDGE ±.008"
HOLE TO EDGE ±.008"
EDGE TO BEND ±.008"
BEND TO BEND ±.015"
ANGELES ±0.5°
HOLE DIAMETER ±.005"

5. REMOVE ALL BURRS.
6. STRAIGHT EDGES TO HAVE STRAIGHTNESS TOLERANCE OF .010 [0.25 mm] PER INCH, NOT TO EXCEED 0.040 [1.02 mm] OVER THE ENTIRE LENGHT.
7. FLAT SURFACES TO HAVE A FLATNESS TOLERANCE OF .008 [0.20 mm] PER INCH, NOT TO EXCEED .060 [1.52 mm] OVER THE ENTIRE SURFACE.
8. STEEL FINISH: PASSIVATE.
9. REF: WAUSAUKEE PART NO. SGH126B.

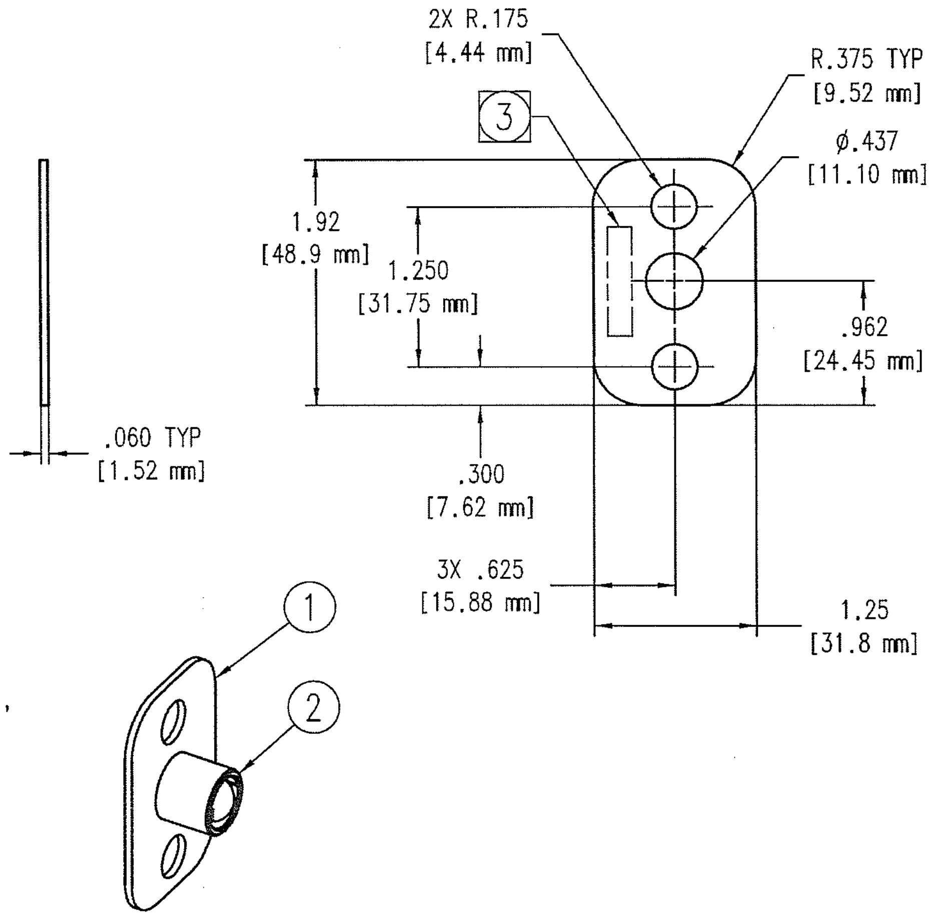

ITEM	QTY	PART OR IDENTIFYING NUMBER	NOMENCLATURE OR DESCRIPTION
2	1	82-35-315-55	SOUTHCO_RECEPTACLE
1	1	10266223M001	SHEETMETAL_REAR ACCES - STEEL, 16 GAGE

Material	—
Part-No.	—
Surface	—
Surface-No.	—
Surface in dm²	—
General Tolerance	~~ISO 2768-mK~~

Fit Dimension	Deviation
—	—
—	—
—	—
—	—

~~Dimensions in mm~~
Tolerance ~~ISO 8015~~
Surface ~~ISO 1302~~
Dimensions to be checked at approval

[redacted]
Medical Solutions

	Dept./Name	Date/Signature
Author	D. NOSAL	
Checked	see SAP/EDM	
Approval	see SAP/EDM	
Modification No.	—	

SHEETMETAL_REAR_ACCES

Part-No.	Doc-Type	Index	Rev.	Type-No.
10266223	EZG	01M	A	S050U

Scale 1:1 | Drawing State: Draft | * I-DEAS *

A3

UNLESS OTHERWISE SPECIFIED

☐ ELECTRICAL DWG PER ANSI Y32.2
☒ MECHANICAL DWG PER ANSI Y14.5
☐ WELD SYMBOLS PER ANSI A2.4
☐ SCREW THREAD PER ANSI Y14.6
☒ LEADING DIMENSIONS IN INCHES
☒ BREAK ALL SHARP EDGES .015 MAX.
--√ MAX. ALL MACHINED SURFACES PER ANSI B46.1

DECIMALS
.X ± --
.XX ± --
.XXX ± --
ANGLES
±---°

Mod.-No.	Name	Date
—	—	—
—	—	—
—	—	—
—	—	—
—	—	—
—	—	—
		28.11.06

Modification History

edges of undefined shape: ISO 13715
-0.3 / -0.1
+0.3 / +0.1
Rz63

First Application
xxxxxxx
xxxxx

First Application
xxxxxxx
xxxxx

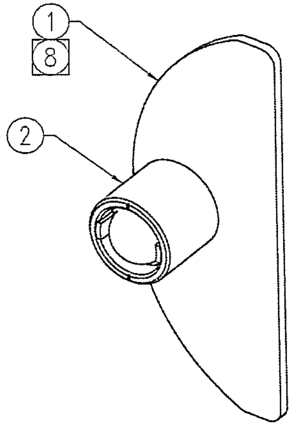

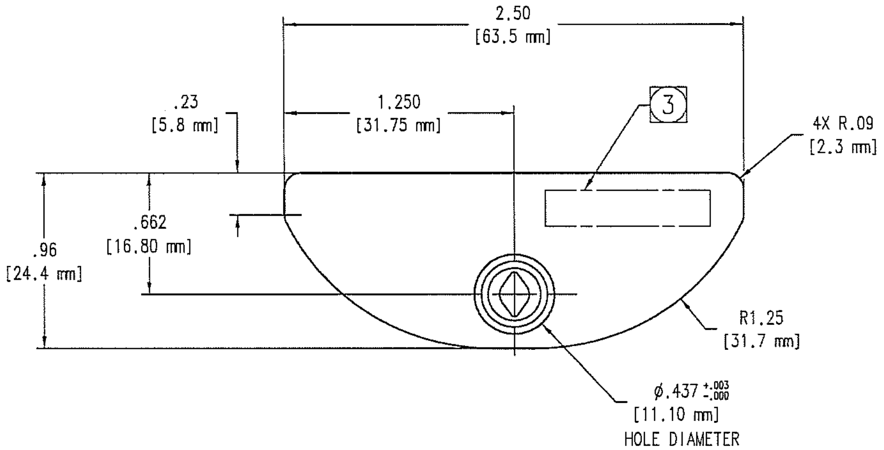

NOTES:

1. PROVIDE PROTECTIVE CONTAINER MARKED WITH DRAWING NUMBER AND REVISION LEVEL.
2. DIMENSIONAL LIMITS APPLY AFTER PLATING (OR OTHER FINISH).

③ PERMANENTLY MARK PART NUMBER AND REVISION APPROXIMATELY WHERE SHOWN.
PART NUMBER KEY SGH143 B
WAUSAUKEE# | SIEMENS REVISION |

4. TOLERANCES FOR METAL PARTS, UNLESS OTHERWISE NOTED:

HOLE TO HOLE ±.004"
EDGE TO EDGE ±.008"
HOLE TO EDGE ±.008"
EDGE TO BEND ±.008"
BEND TO BEND ±.015"
ANGLES ±0.5°
HOLE DIAMETER ±.005"

5. REMOVE ALL BURRS.
6. STRAIGHT EDGES TO HAVE STRAIGHTNESS TOLERANCE OF .010 PER INCH [0.25 mm], NOT TO EXCEED .040 [1.02 mm] OVER THE ENTIRE LENGHT.
7. FLAT SURFACES TO HAVE A FLATNESS TOLERANCE OF .008 PER INCH [0.20 mm], NOT TO EXCEED .060 [1.52 mm] OVER THE ENTIRE SURFACE.

⑧ STEEL FINISH: PASSIVATE.

9. REF: WAUSAUKEE PART NO. SGH145B.

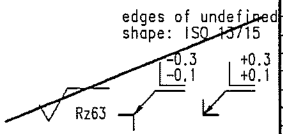

Mod.-No.	Name	Date
–	–	–
–	–	–
–	–	–
–	–	–
–	–	–
		21.11.06

Modification History

UNLESS OTHERWISE SPECIFIED

☐ ELECTRICAL DWG PER ANSI Y32.2
☒ MECHANICAL DWG PER ANSI Y14.5
☐ WELD SYMBOLS PER ANSI A2.4
☐ SCREW THREAD PER ANSI Y14.6
☒ LEADING DIMENSIONS IN INCHES
☒ BREAK ALL SHARP EDGES .015 MAX.
√ MAX. ALL MACHINED SURFACES PER ANSI B46.1

DECIMALS
.X ± --
.XX ± --
.XXX ± --
ANGLES
±--°

ITEM	QTY	PART OR IDENTIFYING NUMBER	NOMENCLATURE OR DESCRIPTION
2	1	82-35-315-55	SOUTHCO_RECEPTACLE
1	1	10266204M001	PLATE_RECEPTACLE - STEEL, 16 GAGE (.0598 THK)

Fit Dimension	Deviation
--	--
--	--
--	--
--	--

Material --
--
Part-No. --
Surface --
Surface-No. --
Surface in dm^2 --
~~Dimensions in mm~~
General Tolerance ~~ISO 2768 mK~~
Tolerance ~~ISO 8015~~
Surface ~~ISO 1302~~
Dimensions to be checked at approval

[redacted]
Medical Solutions

	Dept./Name	Date/Signature
Author	L. MACHNA	
Checked	see SAP/EDM	
Approval	see SAP/EDM	

Modification No. --

PLATE_RECEPTACLE

Part-No. | Doc-Type | Index | Rev. | Type-No.
10266204EZG-01M- B -S050U

Scale 2:1 | Drawing State Draft | • I-DEAS •

A2

NOTES:

1. THIS IS A CRITICAL TO FUNCTION (CTF) DRAWING. NON-DIMENSIONED PART GEOMETRY OF FIBERGLASS SURFACES TO BE CONTROLLED BY ASSOCIATED I-DEAS 3D MODEL, NUMBER 7359495.
2. FIBERGLASS RESIN SYSTEM SHALL BE CERTIFIED TO MEET UL94V0.
3. WALL THICKNESS OF OPEN MOLDED FIBERGLASS PARTS TO BE .13-.19" [3.3-4.8 mm].
4. RADII OF FIBERGLASS PARTS TO BE .13-.19" [3.3-4.8 mm] EXCEPT AS NOTED.
5. TOLERANCE FOR OPEN MOLDED FIBERGLASS PARTS, UNLESS OTHERWISE NOTED:

   TRIM SURFACE ±.04"
   FROM DATUM TO STARTING BRACKET OF BRACKET PATTERN ±.04"
   FROM DATUM TO STARTING HOLE OF HOLE PATTERN ±.04"
   BRACKET TO BRACKET LOCATION ±.02"
   HOLE TO HOLE LOCATION ±.02"
   HOLE DIAMETER 0 TO .433 [0.-11.00 mm] +.006" -.014"
   HOLE DIAMETER OVER .433 [11.00-11.00+ mm] +.035" -.045"
6. PROVIDE PROTECTIVE CONTAINER AND IDENTIFY IT WITH PART NO. AND APPLICABLE REVISION LEVEL.
7. PERMANENTLY MARK PART WITH THE DRAWING NUMBER AND REVISION LEVEL APPROXIMATELY WHERE SHOWN.
8. COREMAT AND BALSA WOOD REFERENCE DIMENSIONS SHOULD BE USED TO AID IN PLACEMENT AND CUT-OUT PATTERNS. REINFORCEMENT SHALL NOT INTERFERE WITH BRACKET POSITIONS OR TRIM EDGES.
9. DIMENSIONAL LIMITS APPLY AFTER PLATING (OR OTHER FINISH).
10. PROTECT THREADS FROM DAMAGE AND ASSURE THAT THEY REMAIN FREE OF DEBRIS.
11. COLOR MATCH TO SIEMENS WHITE 610 WITH MICROTEXTURE (FEINSTRUKTURE 4).
12. ATTACH BRACKETS WITH EPOXY AND THEN COVER WITH FIBERGLASS.
13. TORQUE TO 156 LBF-IN [18Nm].
14. VENDOR OPTION - ALTERNATE FABRICATION: OMIT ITEM 6 AND SUBSTITUTE TWO LAYERS OF STRUCTURAL FIBERGLASS TO INDICATED SQUARE PERIMETER.
15. DO NOT TEXTURE PAINT, FAR SIDE OF LIP AS SHOWN, FROM 'A' TO 'B'.

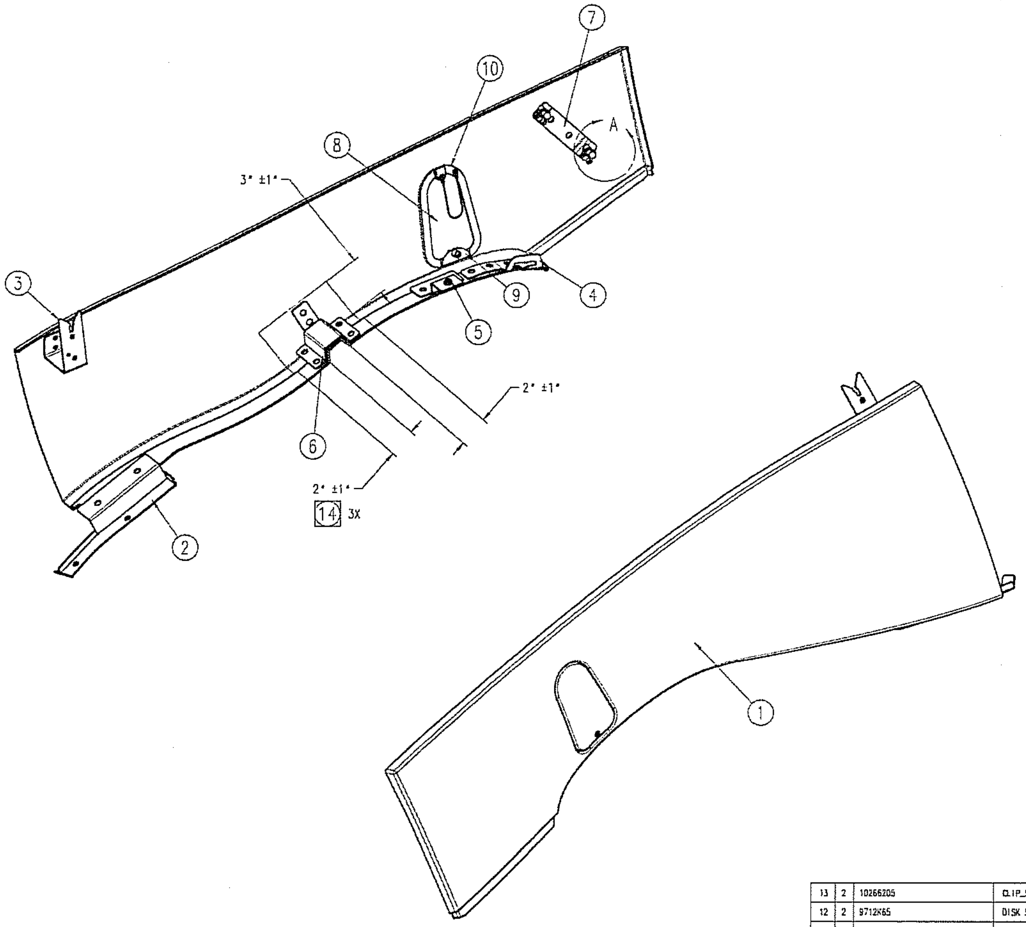

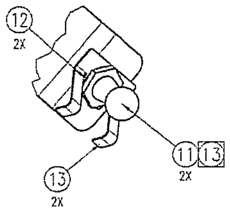

DETAIL A
SCALE 1/1

ITEM	QTY	PART OR IDENTIFYING NUMBER	NOMENCLATURE OR DESCRIPTION
13	2	10266205	CLIP_SPRING_401_020THK
12	2	9712K65	DISK SPRING_BELLEVILLE_317ID_625OD_022THK_MCMASTER
11	2	9512K83	BALL STUD_5/16-18_13MM
10	1	90312A11	LANYARD_F13_64IN_NYLON COATED_MCMASTER
9	1	10266204	PLATE_RECEPTACLE
8	1	5859157	COVER_AFC_ACCESS_ONCOR
7	1	10266206	BRACKET_D_PIVOT_COLLIMATOR
6	1	10266207	BRACKET_U_COLLIMATOR
5	1	10266211	BRACKET_Z_COLLIMATOR
4	1	10266236	BRACKET_LEFT_COLLIMATOR
3	1	10266235	BRACKET_A_LEFT_COLLIMATOR
2	1	10266234	BRACKET_B_LEFT_COLLIMATOR
1	1	7359495M001	COVER_COLLIMATOR_LEFT - POLYESTER, FIBERGLASS REINFORCED

edges of undefined shape: ISO 13715
-0.3 -0.1
+0.3 +0.1
Rz63

–	–	–
–	–	–
–	–	–
–	–	–
–	–	–
–	–	–
		01.12.06
Mod.-No.	Name	Date

Modification History

UNLESS OTHERWISE SPECIFIED

☐ ELECTRICAL DWG PER ANSI Y32.2
☐ MECHANICAL DWG PER ANSI Y14.5
☐ WELD SYMBOLS PER ANSI A2.4
☐ SCREW THREAD PER ANSI Y14.6
☒ LEADING DIMENSIONS IN INCHES
☐ BREAK ALL SHARP EDGES .015 MAX.
√ MAX. ALL MACHINED SURFACES PER ANSI B46.1

DECIMALS
.X ± --
.XX ± ---
.XXX ± ----

ANGLES
±---°

Material —
—
Part-No. —
Surface —
Surface-No. —
Surface in m² —
General Tolerance ~~ISO 2768-mK~~
Tolerance ~~ISO 8015~~
Surface ~~ISO 1302~~
Dimensions to be checked at approval

[redacted]

Dept./Name		Date/Signature
Author	W. KOWALSKI	
Checked	see SAP/EDM	
Approval	see SAP/EDM	

Modification No. --

ONCOR_CLLMTR_CVR_LFT_ASM

Part-No. | Doc-Type | Index | Rev. | Type-No.
7359495EZG-01P- 2 -

Scale 1:5 | Drawing State Draft | • I-DEAS •

A1

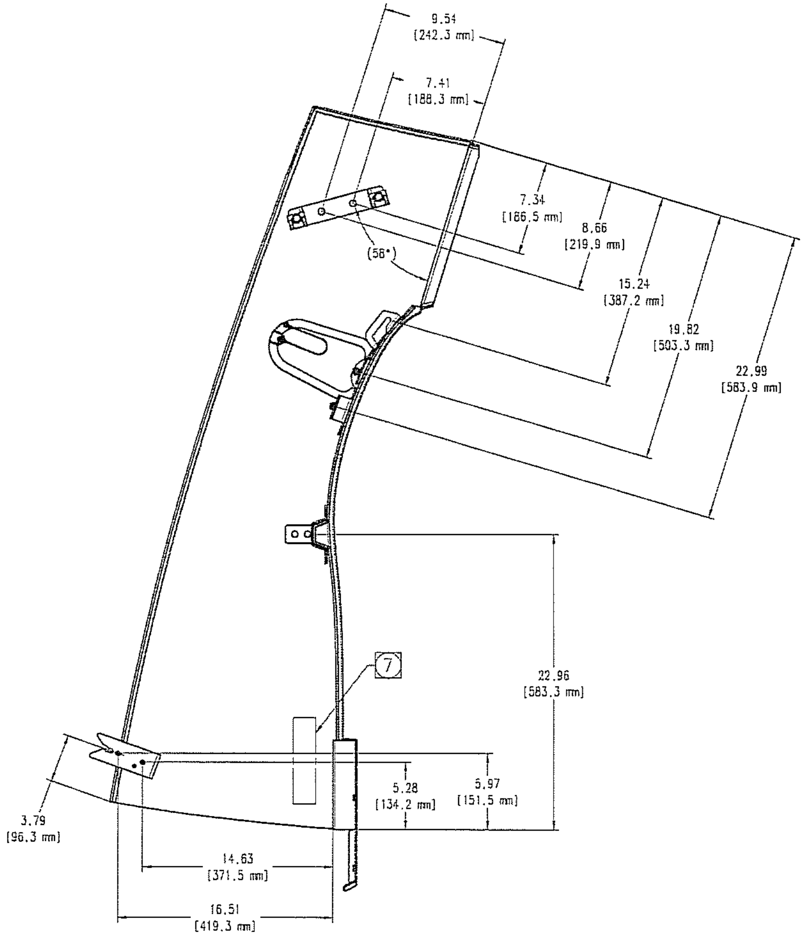
9.54
[242.3 mm]
7.41
[188.3 mm]
7.34
[166.5 mm]
8.66
[219.9 mm]
(56°)
15.24
[387.2 mm]
19.82
[503.3 mm]
22.99
[583.9 mm]
7
22.96
[583.3 mm]
5.28
[134.2 mm]
5.97
[151.5 mm]
3.79
[96.3 mm]
14.63
[371.5 mm]
16.51
[419.3 mm]

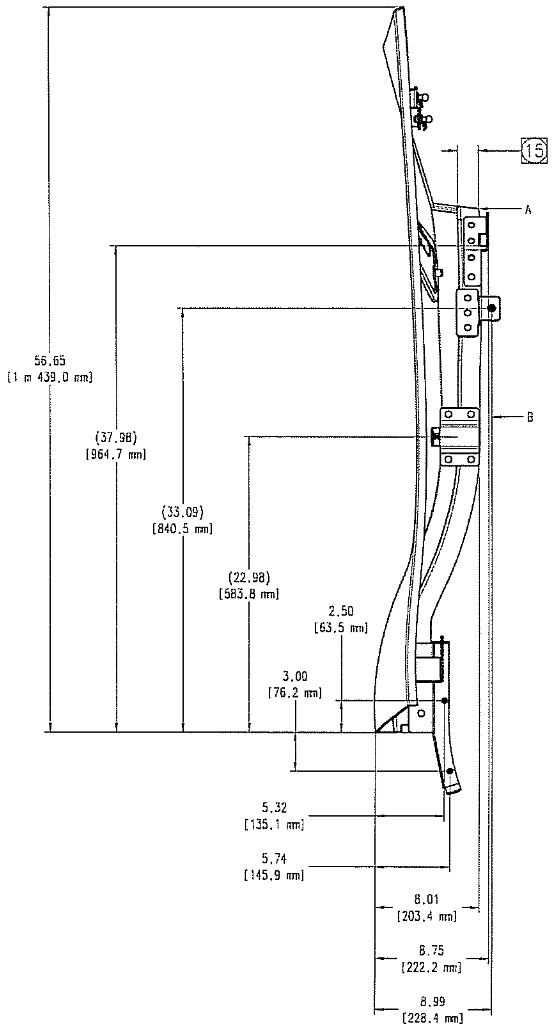
15
A
B
56.65
[1 m 439.0 mm]
(37.98)
[964.7 mm]
(33.09)
[840.5 mm]
(22.98)
[583.8 mm]
2.50
[63.5 mm]
3.00
[76.2 mm]
5.32
[135.1 mm]
5.74
[145.9 mm]
8.01
[203.4 mm]
8.75
[222.2 mm]
8.99
[228.4 mm]

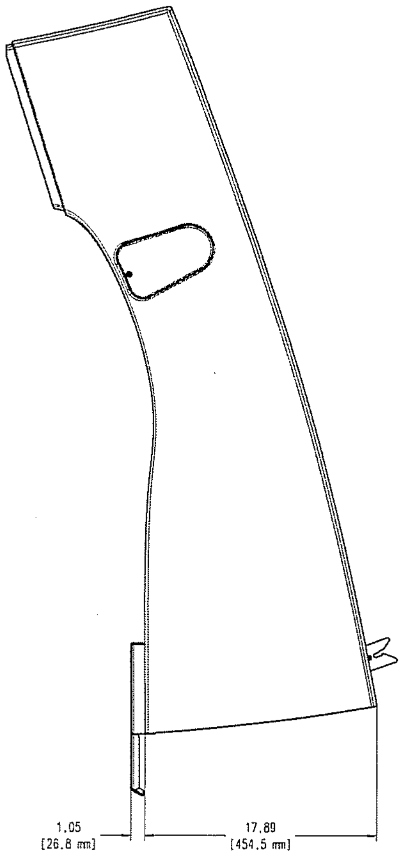
1.05
[26.8 mm]
17.89
[454.5 mm]

edges of undefined shape: ISO 13715
$^{+0.3}_{-0.1}$ $^{+0.3}_{+0.1}$
Rz63

—	—	—
—	—	—
—	—	—
—	—	—
—	—	—
—	—	—
		01.12.05
Mod.-No.	Name	Date

Modification History

UNLESS OTHERWISE SPECIFIED

☐ ELECTRICAL DWG PER ANSI Y32.2
☐ MECHANICAL DWG PER ANSI Y14.5
☐ WELD SYMBOLS PER ANSI A2.4
☐ SCREW THREAD PER ANSI Y14.6
☒ LEADING DIMENSIONS IN INCHES
☐ BREAK ALL SHARP EDGES .015 MAX.
√ MAX. ALL MACHINED SURFACES PER ANSI B46.1

DECIMALS
.X ± --
.XX ± ---
.XXX ± ----
ANGLES
±---°

Material
--
--
Part-No. —
Tl Nominal Deviation
Surface —
Surface-No. —
Surface in m² —
General Tolerance ~~ISO 2768 mK~~
Tolerance ~~ISO 8015~~
Surface ~~ISO 1302~~
Dimensions to be checked at approval

[redacted] Medical Solutions

	Dept./Name	Date/Signature
Author	W. KOWALSKI	
Checked	see SAP/EDW	
Approval	see SAP/EDW	

Modification No. --

ONCOR_CLLMTR_CVR_LEFT_ASM

Part-No. | Doc-Type | Index | Rev. | Type-No.
7359495EZG-02M- 2 -

Scale 1:5 | Drawing State Draft | - I-DEAS -

A1

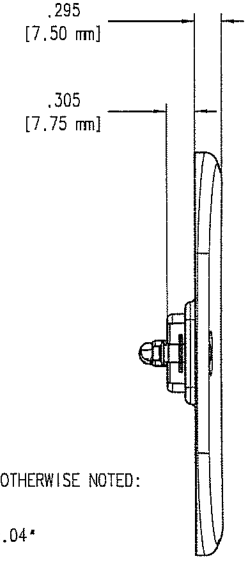

.295
[7.50 mm]
.305
[7.75 mm]

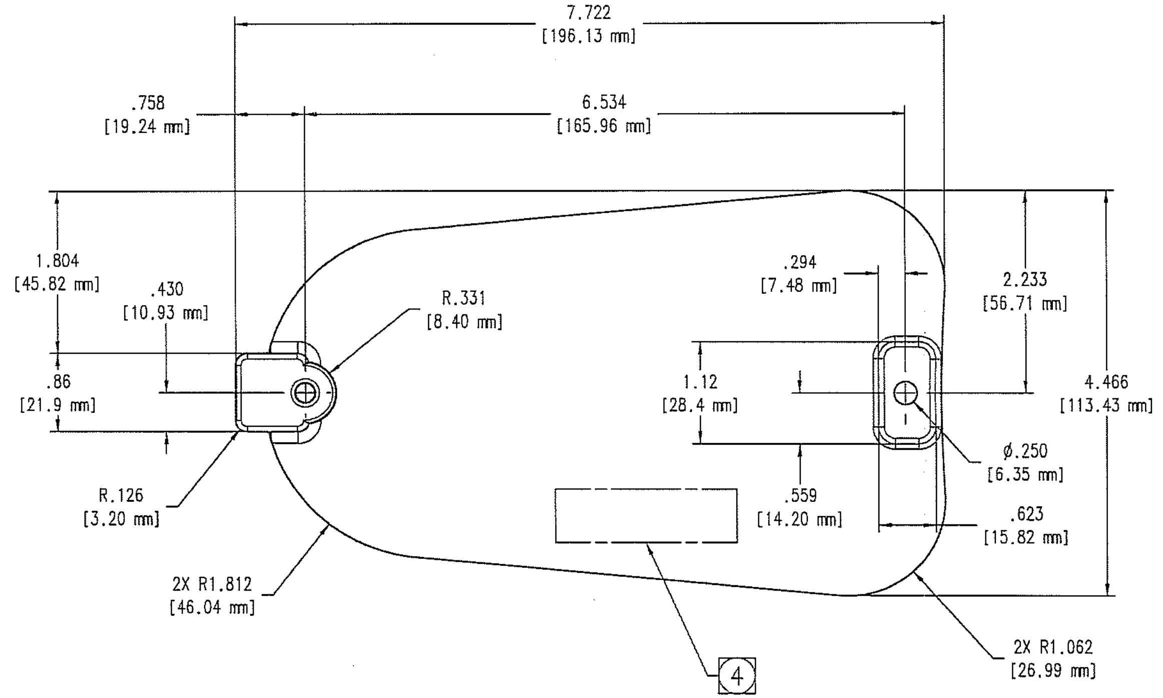

7.722
[196.13 mm]
.758
[19.24 mm]
6.534
[165.96 mm]
1.804
[45.82 mm]
.430
[10.93 mm]
R.331
[8.40 mm]
.86
[21.9 mm]
R.126
[3.20 mm]
2X R1.812
[46.04 mm]
.294
[7.48 mm]
2.233
[56.71 mm]
1.12
[28.4 mm]
4.466
[113.43 mm]
ø.250
[6.35 mm]
.559
[14.20 mm]
.623
[15.82 mm]
2X R1.062
[26.99 mm]
4

NOTES:

1. PROVIDE PROTECTIVE CONTAINER AND IDENTIFY IT WITH PART NO. AND APPLICABLE REVISION LEVEL.

2. TOLERANCE FOR OPEN MOLDED FIBERGLASS PARTS, UNLESS OTHERWISE NOTED:

   TRIM SURFACE ±.04"
   FROM DATUM TO STARTING BRACKET OF BRACKET PATTERN ±.04"
   FROM DATUM TO STARTING HOLE OF HOLE PATTERN ±.04"
   BRACKET TO BRACKET LOCATION ±.02"
   HOLE TO HOLE LOCATION ±.02"
   HOLE DIAMETER 0 TO [0.-11.00 mm] .433 +.006" -.014"
   HOLE DIAMETER OVER [11.00-11.00+ mm] .433 +.035" -.045"

3. COLOR TO MATCH SIEMENS MEDIUM BASIC 610 WITH MICROTEXTURE (FEINSTRUKTURE 4).

4. PART SHAAL BE PERMANENTLY MARKED WITH THE PART NUMBER AND REVISION LEVEL OF INDIVIDUAL PART DRAWING APPROXIMATELY WHERE SHOWN.

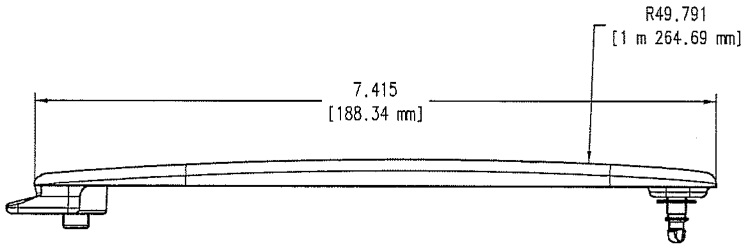

R49.791
[1 m 264.69 mm]
7.415
[188.34 mm]

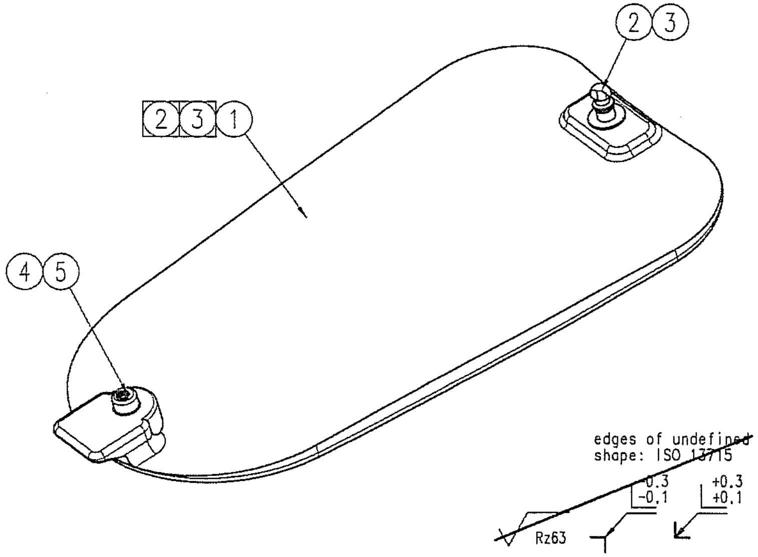

2
3
1
2
3
4
5
edges of undefined shape: ISO 13715
-0.3
-0.1
+0.3
+0.1
Rz63

ITEM	QTY	PART OR IDENTIFYING NUMBER	NOMENCLATURE OR DESCRIPTION
5	1	94180A353	M4-7X7_9MM_BRASS THREADED INSERT_MCMASTER
4	1	91303A039	M4-8_HD CUP SCREW_SOC STEEL_MCMASTER
3	1	82-19-400-16	QUARTER TURN OVAL PHL_SOUTHCO
2	1	82-32-301-12	WASHER_SOUTHCO_203DIA
1	1	5859157M001	COVER_AFC ACCESS_ONCOR

Mod.-No.	Name	Date
–	–	–
–	–	–
–	–	–
–	–	–
–	–	–
–	–	–
	–	–

Modification History

UNLESS OTHERWISE SPECIFIED

☐ ELECTRICAL DWG PER ANSI Y32.2
☐ MECHANICAL DWG PER ANSI Y14.5
☐ WELD SYMBOLS PER ANSI A2.4
☐ SCREW THREAD PER ANSI Y14.6
☒ LEADING DIMENSIONS IN INCHES
☐ BREAK ALL SHARP EDGES .015 MAX.
MAX. ALL MACHINED SURFACES PER ANSI B46.1

DECIMALS
.X ± --
.XX ± ---
.XXX ± ----
ANGLES
±---°

Fit Dimension	Deviation
--	--
--	--
--	--
--	--

Material --
--
Part-No. --
Surface --
Surface-No. --
Surface in dm^2 --
General Tolerance ~~ISO 2768 mK~~
~~Dimensions in mm~~
Tolerance ~~ISO 8015~~
Surface ~~ISO 1302~~
Dimensions to be checked at approval

[redacted]
Medical Solutions

Dept./Name		Date/Signature
Author	W. KOWALSKI	
Checked	see SAP/EDM	
Approval	see SAP/EDM	

Modification No. --

COVER_AFC_ACCESS_ONCOR

Part-No.	Doc-Type	Index	Rev.	Type-No.
5859157	EZG-01M-	A	-	S050U

Scale 1:1
Drawing State Draft
• I-DEAS •
A2

First Application
xxxxxxx
xxxxx

NOTES:

1. THIS IS A CRITICAL TO FUNCTION (CTF) DRAWING. NON-DIMENSIONED PART GEOMETRY OF FIBERGLASS SURFACES TO BE CONTROLLED BY ASSOCIATED I-DEAS 3D MODEL, NUMBER 7359479.
2. FIBERGLASS RESIN SYSTEM SHALL BE CERTIFIED TO MEET UL94V0.
3. WALL THICKNESS OF OPEN MOLDED FIBERGLASS PARTS TO BE .13-.19" [3.3-4.8 mm].
4. RADII OF FIBERGLASS PARTS TO BE .13-.19" [3.3-4.8 mm] EXCEPT AS NOTED.
5. TOLERANCE FOR OPEN MOLDED FIBERGLASS PARTS, UNLESS OTHERWISE NOTED:

   TRIM SURFACE ±.04"
   FROM DATUM TO STARTING BRACKET OF BRACKET PATTERN ±.04"
   FROM DATUM TO STARTING HOLE OF HOLE PATTERN ±.04"
   BRACKET TO BRACKET LOCATION ±.02"
   HOLE TO HOLE LOCATION ±.02"
   HOLE DIAMETER 0 TO .433 +.006" -.014" [11.00 mm]
   HOLE DIAMETER OVER .433 +.035" -.045" [11.00 mm]

6. PROVIDE PROTECTIVE CONTAINER AND IDENTIFY IT WITH PART NO. AND APPLICABLE REVISION LEVEL.

$\boxed{7}$ PART SHALL BE PERMANENTLY MARKED WITH THE DRAWING NUMBER AND REVISION LEVEL OF INDIVIDUAL PART DRAWING APPROXIMATELY WHERE SHOWN.

8. COREMAT AND BALSA WOOD REFERENCE DIMENSIONS SHOULD BE USED TO AID IN PLACEMENT AND CUT-OUT PATTERNS. REINFORCEMENT SHALL NOT INTERFERE WITH BRACKET POSITIONS OR TRIM EDGES.
9. DIMENSIONAL LIMITS APPLY AFTER PLATING (OR OTHER FINISH).
10. PROTECT THREADS FROM DAMAGE AND ASSURE THAT THEY REMAIN FREE OF DEBRIS.

$\boxed{11}$ COLOR MATCH TO SIEMENS WHITE 610 WITH MICROTEXTURE (FEINSTRUKTURE 4).

$\boxed{12}$ COLOR MATCH TO SIEMENS BLUE 750 WITH MICROTEXTURE (FEINSTRUKTURE 4).

13. ATTACH BRACKETS WITH EPOXY THEN COVER WITH FIBERGLASS.

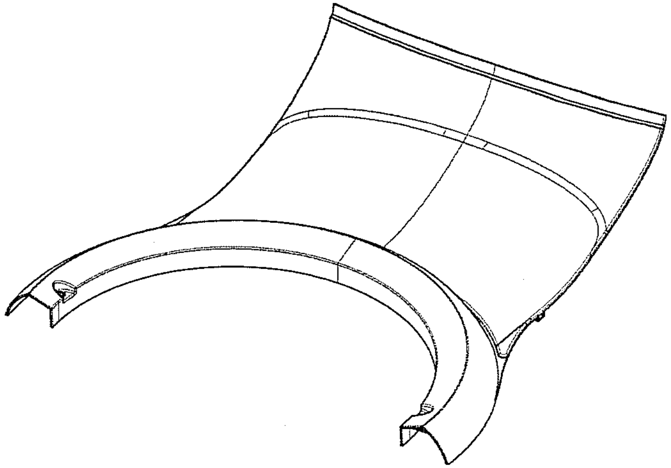

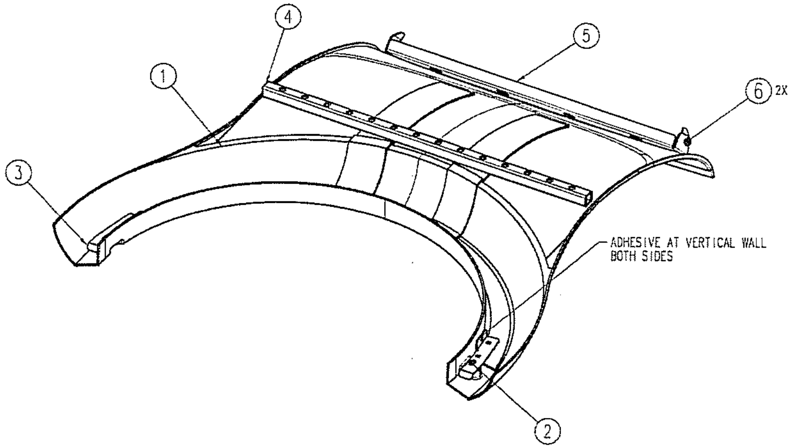

edges of undefined shape: ISO 13715
Rz63
-0.3 -0.1
+0.3 +0.1

Mod.-No.	Name	Date
–	–	–
–	–	–
–	–	–
–	–	–
–	–	–
–	–	–
		01.12.05

Modification History

UNLESS OTHERWISE SPECIFIED

- ☐ ELECTRICAL DWG PER ANSI Y32.2
- ☒ MECHANICAL DWG PER ANSI Y14.5
- ☐ WELD SYMBOLS PER ANSI A2.4
- ☐ SCREW THREAD PER ANSI Y14.6
- ☒ LEADING DIMENSIONS IN INCHES
- ☐ BREAK ALL SHARP EDGES .015 MAX.
- MAX. ALL MACHINED SURFACES PER ANSI B46.1

DECIMALS
.X ± --
.XX ± --
.XXX ± --
ANGLES
±---°

ITEM	QTY	PART OR IDENTIFYING NUMBER	NOMENCLATURE OR DESCRIPTION
6	2	10266414	SC_SHOULDER_M6
5	1	10266230	BRACKET_BLUE RING_CROSSBAR
4	1	6535K21	BRACKET_BLUE RING SQUERE
3	1	10266217	BRACKET A2_BLUE RING_LEFT
2	1	10266218	BRACKET A2_BLUE RING
1	1	7359479M001	COVER_BLUE RING_ONCOR

Material --
--
Part-No. --
Surface —
Surface-No. —
Setting in as ² —
General Tolerance ~~ISO 2768 mK~~
Tolerance ~~[illegible]~~
Surface ~~[illegible]~~
Dimensions to be checked at approval

[redacted]

Dept./Name		Date/Signature
Author	D. NOSAL	
Checked	see SAP/EDM	
Approval	see SAP/EDM	

Modification No. --

COVER_BLUE_RING_ONCOR_R3

Part-No. | Doc-Type | Index | Rev. | Type-No.
7359479EZG-01P- 3 -

Scale 1:5 | Drawing State Draft | ▾ I-DEAS ▾

A1

First application

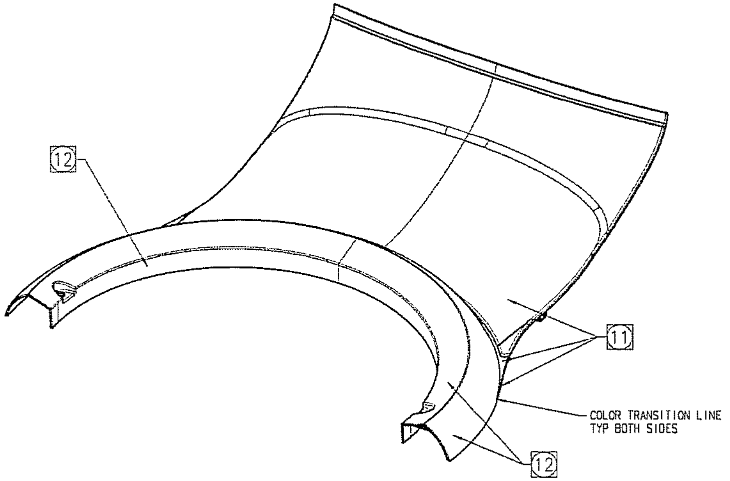
12
11
COLOR TRANSITION LINE
TYP BOTH SIDES
12

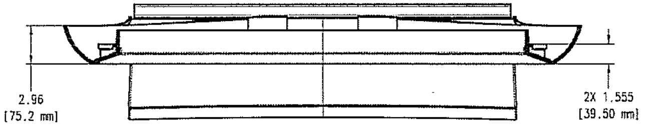
2.96
[75.2 mm]
2X 1.555
[39.50 mm]

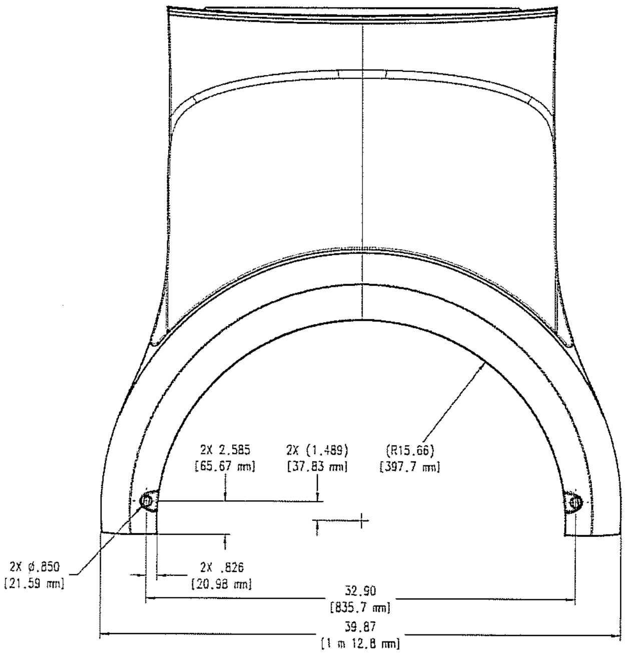
2X 2.585
[65.67 mm]
2X (1.489)
[37.83 mm]
(R15.66)
[397.7 mm]
2X ⌀.850
[21.59 mm]
2X .826
[20.98 mm]
32.90
[835.7 mm]
39.87
[1 m 12.8 mm]

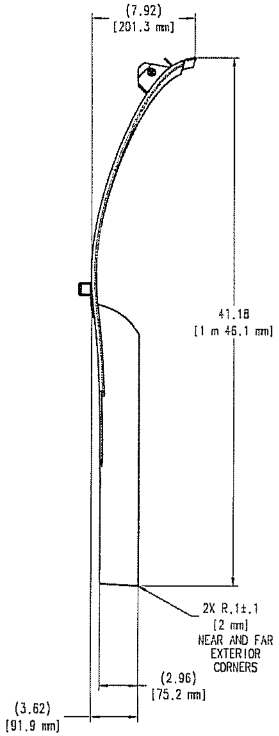
(7.92)
[201.3 mm]
41.18
[1 m 46.1 mm]
2X R.1±.1
[2 mm]
NEAR AND FAR
EXTERIOR
CORNERS
(2.96)
[75.2 mm]
(3.62)
[91.9 mm]

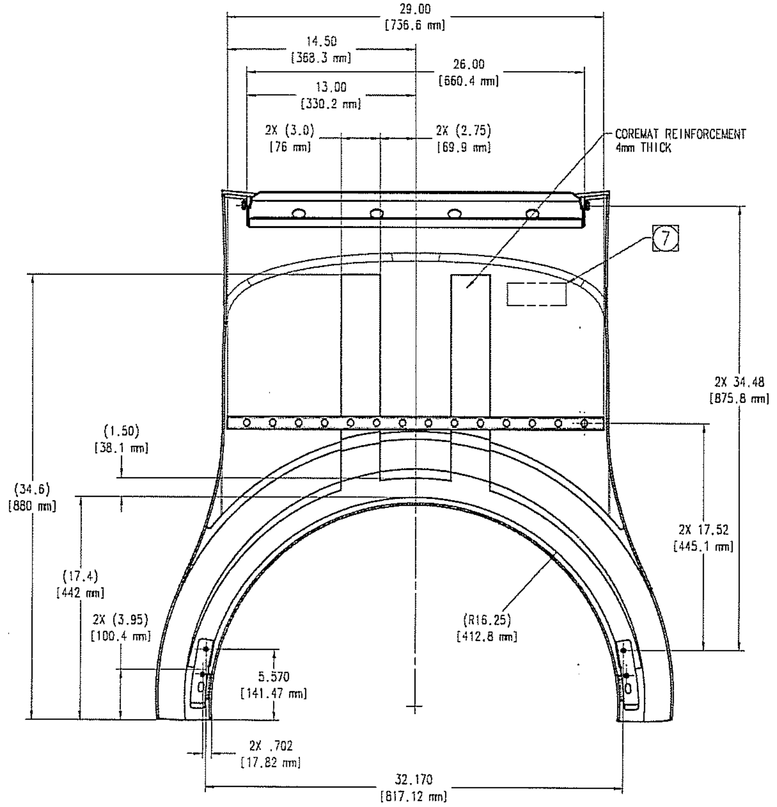
29.00
[736.6 mm]
14.50
[368.3 mm]
26.00
[660.4 mm]
13.00
[330.2 mm]
2X (3.0)
[76 mm]
2X (2.75)
[69.9 mm]
COREMAT REINFORCEMENT
4mm THICK
7
2X 34.48
[875.8 mm]
(1.50)
[38.1 mm]
(34.6)
[880 mm]
2X 17.52
[445.1 mm]
(17.4)
[442 mm]
2X (3.95)
[100.4 mm]
(R16.25)
[412.8 mm]
5.570
[141.47 mm]
2X .702
[17.82 mm]
32.170
[817.12 mm]

edges of undefined shape: ISO 13715

0.3
-0.1

+0.3
+0.1

Rz63

–	–	–
–	–	–
–	–	–
–	–	–
–	–	–
–	–	–
		01.12.06
Mod.-No.	Name	Date

Modification History

UNLESS OTHERWISE SPECIFIED

☐ ELECTRICAL DWG PER ANSI Y32.2
☒ MECHANICAL DWG PER ANSI Y14.5
☐ WELD SYMBOLS PER ANSI A2.4
☐ SCREW THREAD PER ANSI Y14.6
☒ LEADING DIMENSIONS IN INCHES
☐ BREAK ALL SHARP EDGES .015 MAX.
√ MAX. ALL MACHINED SURFACES PER ANSI B46.1

DECIMALS
.X ± --
.XX ± --
.XXX ± --

ANGLES
±---°

Material	–
	–
Part-No.	–
Surface	–
Surface-No.	–
Surface in dm²	–
General Tolerance	~~ISO 2768 mK~~
Tolerance	~~ISO 286~~
Surface	~~ISO 1302~~

Dimensions to be checked at approval

[redacted]

	Dept./Name	Date/Signature
Author	D. NOSAL	
Checked	see SAP/EDM	
Approved	see SAP/EDM	

Modification No. --

COVER_BLUE_RING_ONCOR_R3

Part-No.	Doc-Type	Index	Rev.	Type-No.
7359479	EZG	02M	3	–

Scale	Drawing State	
1:5	Draft	• I-DEAS •

A1

NOTES:

1. THIS IS A CRITICAL TO FUNCTION (CTF) DRAWING. NON-DIMENSIONED PART GEOMETRY OF FIBERGLASS SURFACES TO BE CONTROLLED BY ASSOCIATED I-DEAS 3D MODEL, NUMBER 7359461.

2. FIBERGLASS RESIN SYSTEM SHALL BE CERTIFIED TO MEET UL94V0.

3. WALL THICKNESS OF OPEN MOLDED FIBERGLASS PARTS TO BE .13-.19" [3.3-4.8 mm].

4. RADII OF FIBERGLASS PARTS TO BE .13-.19" [3.3-4.8 mm] EXCEPT AS NOTED.

$\boxed{5}$ TOLERANCE FOR OPEN MOLDED FIBERGLASS PARTS, UNLESS OTHERWISE NOTED:

TRIM SURFACE ±.04"
FROM DATUM TO STARTING BRACKET OF BRACKET PATTERN ±.04"
FROM DATUM TO STARTING HOLE OF HOLE PATTERN ±.04"
BRACKET TO BRACKET LOCATION ±.02"
HOLE TO HOLE LOCATION ±.02"
HOLE DIAMETER 0 TO .433 +.006" -.014" [11.00 mm]
HOLE DIAMETER OVER .433 +.035" -.045" [11.00 mm]

6. PROVIDE PROTECTIVE CONTAINER AND IDENTIFY IT WITH PART NO. AND APPLICABLE REVISION LEVEL.

$\boxed{7}$ PART SHALL BE PERMANENTLY MARKED WITH THE DRAWING NUMBER AND REVISION LEVEL APPROXIMATELY WHERE SHOWN.

$\boxed{8}$ COREMAT AND BALSA WOOD REFERENCE DIMENSIONS SHOULD BE USED TO AID IN PLACEMENT AND CUT-OUT PATTERNS. REINFORCEMENT SHALL NOT INTERFERE WITH BRACKET POSITIONS OR TRIM EDGES.

9. DIMENSIONAL LIMITS APPLY AFTER PLATING (OR OTHER FINISH).

10. PROTECT THREADS FROM DAMAGE AND ASSURE THAT THEY REMAIN FREE OF DEBRIS.

$\boxed{11}$ COLOR MATCH TO SIEMENS WHITE 610 WITH MICROTEXTURE (FEINSTRUKTURE 4).

$\boxed{12}$ COLOR MATCH TO SIEMENS BLUE 750 WITH MICROTEXTURE (FEINSTRUKTURE 4).

13. ATTACH BRACKETS WITH EPOXY THEN COVER WITH FIBERGLASS.

$\boxed{14}$ NAMEPLATE SHALL LAY FLAT WITHIN THE FIBERGLASS DETAIL WITHOUT INTERFERENCE BETWEEN THE FIBERGLASS DETAIL EDGES AND THE NAMEPLATE.

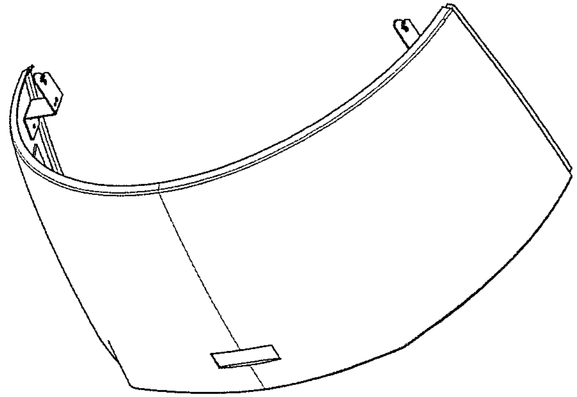

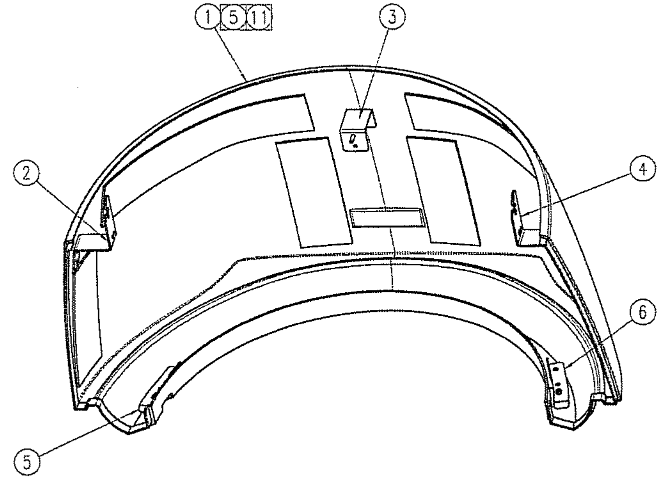

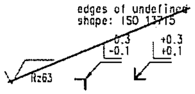

—	—	—	
—	—	—	
—	—	—	
—	—	—	
—	—	—	
—	—	—	
		04.12.06	
Mod.-No.	Name	Date	

Modification History

UNLESS OTHERWISE SPECIFIED

☐ ELECTRICAL DWG PER ANSI Y32.2
☒ MECHANICAL DWG PER ANSI Y14.5
☐ WELD SYMBOLS PER ANSI A2.4
☐ SCREW THREAD PER ANSI Y14.6
☒ LEADING DIMENSIONS IN INCHES
☐ BREAK ALL SHARP EDGES .015 MAX.
MAX. ALL MACHINED SURFACES PER ANSI B46.1

DECIMALS
.X ± --
.XX ± --
.XXX ± --

ANGLES
±---°

ITEM	QTY	PART OR IDENTIFYING NUMBER	NOMENCLATURE OR DESCRIPTION
6	1	10266218	BRACKET_A2_BLUE_RING
5	1	10266217	BRACKET_A2_BLUE_RING_LEFT
4	1	10266216	BRACKET_B_FRONT_PERP_LEFT
3	1	10266227	BRACKET_A_FRONT_PIN
2	1	10266215	BRACKET_B_FRONT_PERP
1	1	7359461M0D1	COVER_FRONT

Material
--
--
Part-No. —

Surface —
Surface-No. —
Surface in m² —

General Tolerance ~~ISO 2768-mK~~

Tolerance ~~ISO 8015~~
Surface ~~ISO 1302~~

Dimensions to be checked at approval

	Dept./Name	Date/Signature
Author	D. NOSAL	
Checked	see SAP/EDM	
Approval	see SAP/EDM	

Modification No. --

[redacted] Medical Solutions

FRONT_INNER_COVER_ASM

Part-No.	Doc-Type	Index	Rev.	Type-No.
7359461	EZG	01	P- 3	-

Scale 1:5 | Drawing State Draft | ▪ I-DEAS ▪

A1

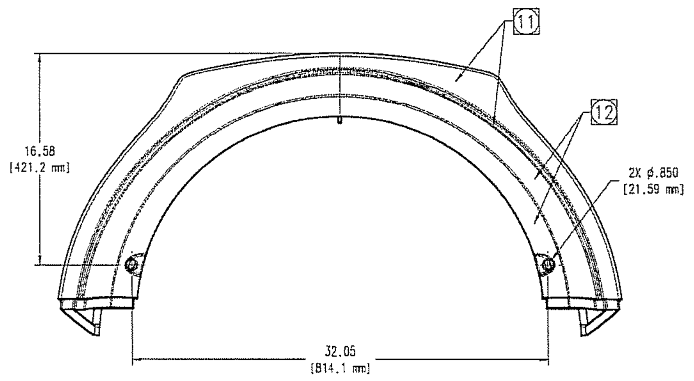
11
12
16.58
[421.2 mm]
2X ϕ.850
[21.59 mm]
32.05
[814.1 mm]

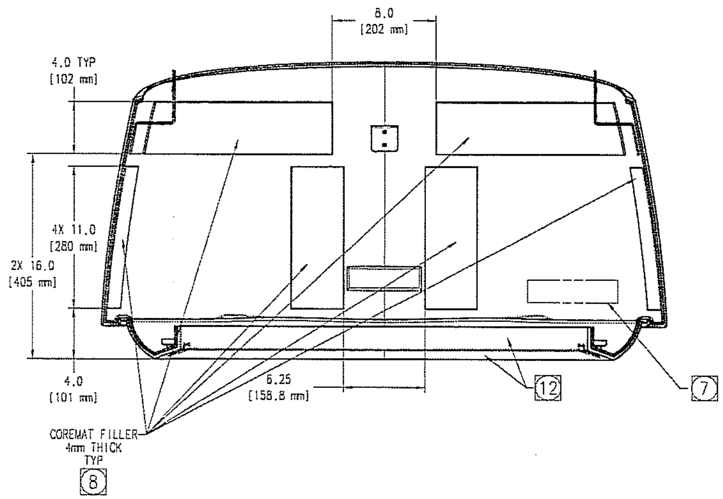
8.0
[202 mm]
4.0 TYP
[102 mm]
4X 11.0
[280 mm]
2X 16.0
[405 mm]
4.0
[101 mm]
6.25
[158.8 mm]
12
7
COREMAT FILLER
4mm THICK
TYP
8

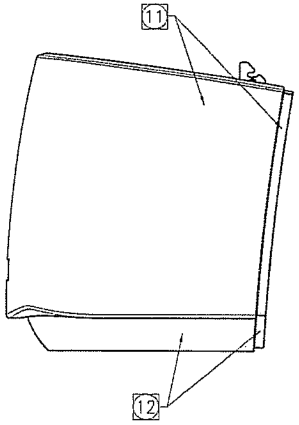

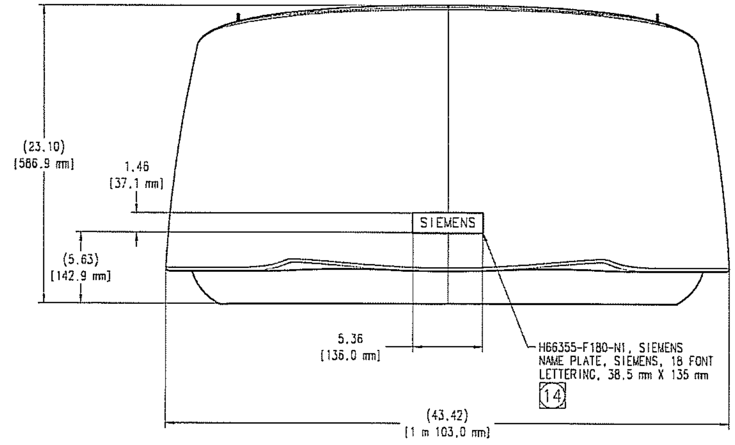
(23.10)
[586.9 mm]
1.46
[37.1 mm]
SIEMENS
(5.63)
[142.9 mm]
5.36
[136.0 mm]
H66355-F180-N1, SIEMENS
NAME PLATE, SIEMENS, 18 FONT
LETTERING, 38.5 mm X 135 mm
14
(43.42)
[1 m 103.0 mm]

edges of undefined shape: ISO 13715
+0.3 −0.1
+0.3 +0.1
Rz63

Mod.-No.	Name	Date
--	--	--
--	--	--
--	--	--
--	--	--
--	--	--
--	--	--
		04.12.06

Modification History

UNLESS OTHERWISE SPECIFIED

☐ ELECTRICAL DWG PER ANSI Y32.2
☒ MECHANICAL DWG PER ANSI Y14.5
☐ WELD SYMBOLS PER ANSI A2.4
☐ SCREW THREAD PER ANSI Y14.6
☒ LEADING DIMENSIONS IN INCHES
☐ BREAK ALL SHARP EDGES .015 MAX.
MAX. ALL MACHINED SURFACES PER ANSI B46.1

DECIMALS
.X ± --
.XX ± --
.XXX ± --
ANGLES
±---°

Material	--
Part-No.	--
Surface	--
Surface-No.	--
Surface in m²	--
General Tolerance	~~ISO 2768-mK~~
Tolerance	~~ISO 8015~~
Surface	~~ISO 1302~~
Dimensions to be checked at approval	

Dept./Name		Date/Signature
Author	D. NOSAL	
Checked	see SAP/EDM	
Approval	see SAP/EDM	
Modification No.	--	

[redacted] Medical Solutions

FRONT_INNER_COVER_ASM

Part-No. | Doc-Type | Index | Rev. | Type-No.
7359461EZG-02M- 3 -

Scale 1:5 | Drawing State Draft | • I-DEAS •

A1

First Application

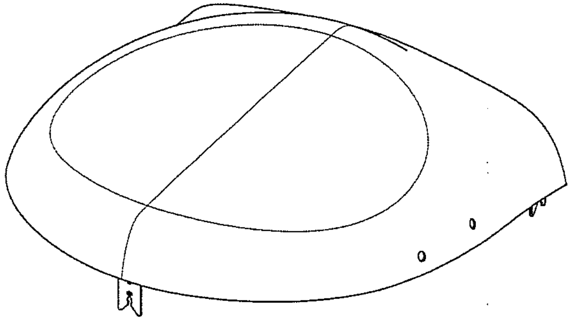

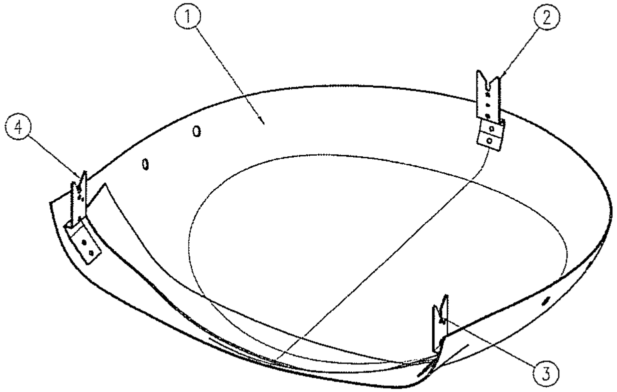

NOTES:

1. FIBERGLASS RESIN SYSTEM SHALL BE CERTIFIED TO MEET UL94VO.
2. WALL THICKNESS OF OPEN MOLDED FIBERGLASS PARTS TO BE .13-.19" [3.3-4.8 mm].
3. RADII OF FIBERGLASS PARTS TO BE .13-.19" [3.3-4.8 mm] EXCEPT AS NOTED.
4. TOLERANCE FOR OPEN MOLDED FIBERGLASS PARTS, UNLESS OTHERWISE NOTED:

   TRIM SURFACE ±.04"
   FROM DATUM TO STARTING BRACKET OF BRACKET PATTERN ±.04"
   FROM DATUM TO STARTING HOLE OF HOLE PATTERN ±.04"
   BRACKET TO BRACKET LOCATION ±.02"
   HOLE TO HOLE LOCATION ±.02"
   HOLE DIAMETER 0 TO .433 +.006" -.014" [11.00 mm]
   HOLE DIAMETER OVER .433 +.035" -.045" [11.00 mm]

5. PROVIDE PROTECTIVE CONTAINER AND IDENTIFY IT WITH PART NO. AND APPLICABLE REVISION LEVEL.

$\boxed{6}$ PART SHAAL BE PERMANENTLY MARKED WITH THE PART NUMBER AND REVISION LEVEL OF INDIVIDUAL PART DRAWING APPROXIMATELY WHERE SHOWN.

7. COREMAT AND BALSA WOOD REFERENCE DIMENSIONS SHOULD BE USED TO AID IN PLACEMENT AND CUT-OUT PATTERNS. REINFORCEMENT SHALL NOT INTERFERE WITH BRACKET POSITIONS OR TRIM EDGES.
8. DIMENSIONAL LIMITS APPLY AFTER PLATING (OR OTHER FINISH).
9. PROTECT THREADS FROM DAMAGE AND ASSURE THAT THEY REMAIN FREE OF DEBRIS.
10. COLOR MATCH TO SIEMENS MEDIUM BASIC 701 WITH MICROTEXTURE (FEINSTRUKTURE 4).
11. PAINT INSIDE OF COVER FLAT BLACK, OVER SPRAY FROM THE OUTSIDE PAINT IS ACCEPTABLE AROUND THE EDGES.
12. ATTACH BRACKETS WITH EPOXY THEN COVER WITH FIBERGLASS.

$\boxed{13}$ FIBERGLASS IN THIS AREA TO BE SMOOTH WITH .13" [3.3 mm] MAXIMUM THICKESS.

edges of undefined shape: ISO 13715
-0.3 -0.1
+0.3 +0.1
Rz63

Mod.-No.	Name	Date
--	--	--
--	--	--
--	--	--
--	--	--
--	--	--
--	--	--
		05.12.06

Modification History

UNLESS OTHERWISE SPECIFIED

☐ ELECTRICAL DWG PER ANSI Y32.2
☒ MECHANICAL DWG PER ANSI Y14.5
☐ WELD SYMBOLS PER ANSI A2.4
☐ SCREW THREAD PER ANSI Y14.6
☒ LEADING DIMENSIONS IN INCHES
☐ BREAK ALL SHARP EDGES .015 MAX.
MAX. ALL MACHINED SURFACES PER ANSI B46.1

DECIMALS
.X ± --
.XX ± --
.XXX ± --
ANGLES
±---°

ITEM	QTY	PART OR IDENTIFYING NUMBER	NOMENCLATURE OR DESCRIPTION
4	1	10266214	BRACKET B_LEFT
3	1	10266213	BRACKET B_TOP
2	1	10266212	BRACKET A_TOP
1	1	5859124MD01	COVER_BENDING MAGNET FIBERGLASS REINFORCED POLYESTER-REV 5

Fit Standard Deviation
Material --
--
Part-No. --
Surface --
Surface-No. --
Surface in m² --
General Tolerance ~~ISO 2768 mK~~
Tolerance ~~ISO 8015~~
Surface ~~ISO 1302~~
Dimensions to be checked at approval

[redacted]
Medical Solutions

Dept./Name		Date/Signature
Author	D. NOSAL	
Checked	see SAP/EDM	
Approval	see SAP/EDM	

Modification No. --

COVER_BENDING_MAGNET

Part-No. | Doc-Type | Index | Rev. | Type-No.
5859124EZG-01P- A -S050U

Scale 1:5 | Drawing State Draft | - I-DEAS -

A1

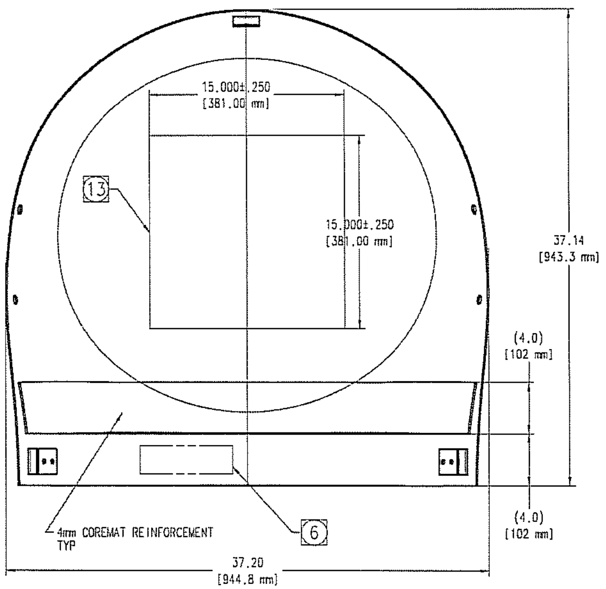
15.000±.250
[381.00 mm]
13
15.000±.250
[381.00 mm]
37.14
[943.3 mm]
(4.0)
[102 mm]
(4.0)
[102 mm]
4mm COREMAT REINFORCEMENT
TYP
6
37.20
[944.8 mm]

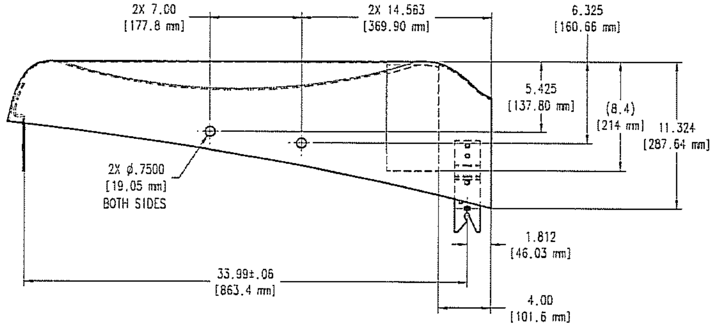
2X 7.00
[177.8 mm]
2X 14.563
[369.90 mm]
6.325
[160.66 mm]
5.425
[137.80 mm]
(8.4)
[214 mm]
11.324
[287.64 mm]
2X ⌀.7500
[19.05 mm]
BOTH SIDES
1.812
[46.03 mm]
33.99±.06
[863.4 mm]
4.00
[101.6 mm]

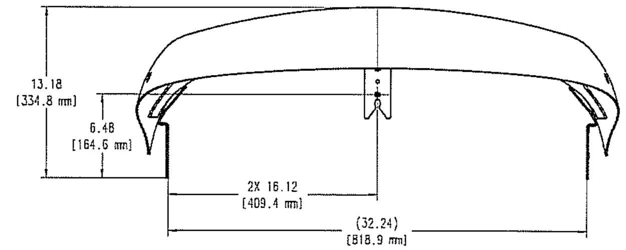
13.18
[334.8 mm]
6.48
[164.6 mm]
2X 16.12
[409.4 mm]
(32.24)
[818.9 mm]

edges of undefined shape: ISO 13715
-0.3 / -0.1
+0.3 / +0.1
Rz63

--	--	--
--	--	--
--	--	--
--	--	--
--	--	--
--	--	--
		05.12.06
Mod.-No.	Name	Date

Modification History

UNLESS OTHERWISE SPECIFIED

☐ ELECTRICAL DWG PER ANSI Y32.2
☒ MECHANICAL DWG PER ANSI Y14.5
☐ WELD SYMBOLS PER ANSI A2.4
☐ SCREW THREAD PER ANSI Y14.6
☒ LEADING DIMENSIONS IN INCHES
☐ BREAK ALL SHARP EDGES .015 MAX.
MAX. ALL MACHINED SURFACES PER ANSI B46.1

DECIMALS
.X ± --
.XX ± --
.XXX ± --
ANGLES
±---°

Material —
Part-No. —
Surface —
Surface-No. —
Surface is as —
Fit Dimension | Deviation
General Tolerance ~~ISO 2768-mK~~
Tolerance ~~ISO 8015~~
Surface ~~ISO 1302~~
Dimensions to be checked at approval

	Dept./Name	Date/Signature
Author	D. NOSAL	
Checked	see SAP/EDM	
Approval	see SAP/EDM	
Modification No.	--	

[redacted]edical Solutions

COVER_BENDING_MAGNET

Part-No.	Doc-Type	Index	Rev.	Type-No.
5859124	EZG-	02M-	A	-S050U

Scale 1:5 | Drawing State Draft | - I-DEAS -

A1

First Application
xxxxxx
xxxxx

NOTES:

1. THIS IS A CRITICAL TO FUNCTION (CTF) DRAWING. NON-DIMENSIONED PART GEOMETRY OF FIBERGLASS SURFACES TO BE CONTROLLED BY ASSOCIATED I-DEAS 3D MODEL, NUMBER 7359453.
2. FIBERGLASS RESIN SYSTEM SHALL BE CERTIFIED TO MEET UL94VO.
3. WALL THICKNESS OF OPEN MOLDED FIBERGLASS PARTS TO BE .13-.19" [3.3-4.8 mm].
4. RADII OF FIBERGLASS PARTS TO BE .13-.19" [3.3-4.8 mm] EXCEPT AS NOTED.
5. TOLERANCE FOR OPEN MOLDED FIBERGLASS PARTS, UNLESS OTHERWISE NOTED:

   TRIM SURFACE ±.04"
   FROM DATUM TO STARTING BRACKET OF BRACKET PATTERN ±.04"
   FROM DATUM TO STARTING HOLE OF HOLE PATTERN ±.04"
   BRACKET TO BRACKET LOCATION ±.02"
   HOLE TO HOLE LOCATION ±.02"
   HOLE DIAMETER 0 TO [0.-11.00 mm] .433 +.006" -.014"
   HOLE DIAMETER OVER [11.00-11.00+ mm] .433 +.005" -.045"

6. PROVIDE PROTECTIVE CONTAINER AND IDENTIFY IT WITH PART NO. AND APPLICABLE REVISION LEVEL.

$\boxed{7}$ PART SHALL BE PERMANENTLY MARKED WITH THE DRAWING NUMBER AND REVISION LEVEL OF INDIVIDUAL PART DRAWING APPROXIMATELY WHERE SHOWN.

8. COREMAT AND BALSA WOOD REFERENCE DIMENSIONS SHOULD BE USED TO AID IN PLACEMENT AND CUT-OUT PATTERNS. REINFORCEMENT SHALL NOT INTERFERE WITH BRACKET POSITIONS OR TRIM EDGES.
9. DIMENSIONAL LIMITS APPLY AFTER PLATING (OR OTHER FINISH).
10. PROTECT THREADS FROM DAMAGE AND ASSURE THAT THEY REMAIN FREE OF DEBRIS.
11. COLOR MATCH TO SIEMENS MEDIUM BASIC 701 WITH MICROTEXTURE (FEINSTRUKTURE 4).
12. ATTACH BRACKETS WITH EPOXY AND THEN COVER WITH FIBERGLASS.

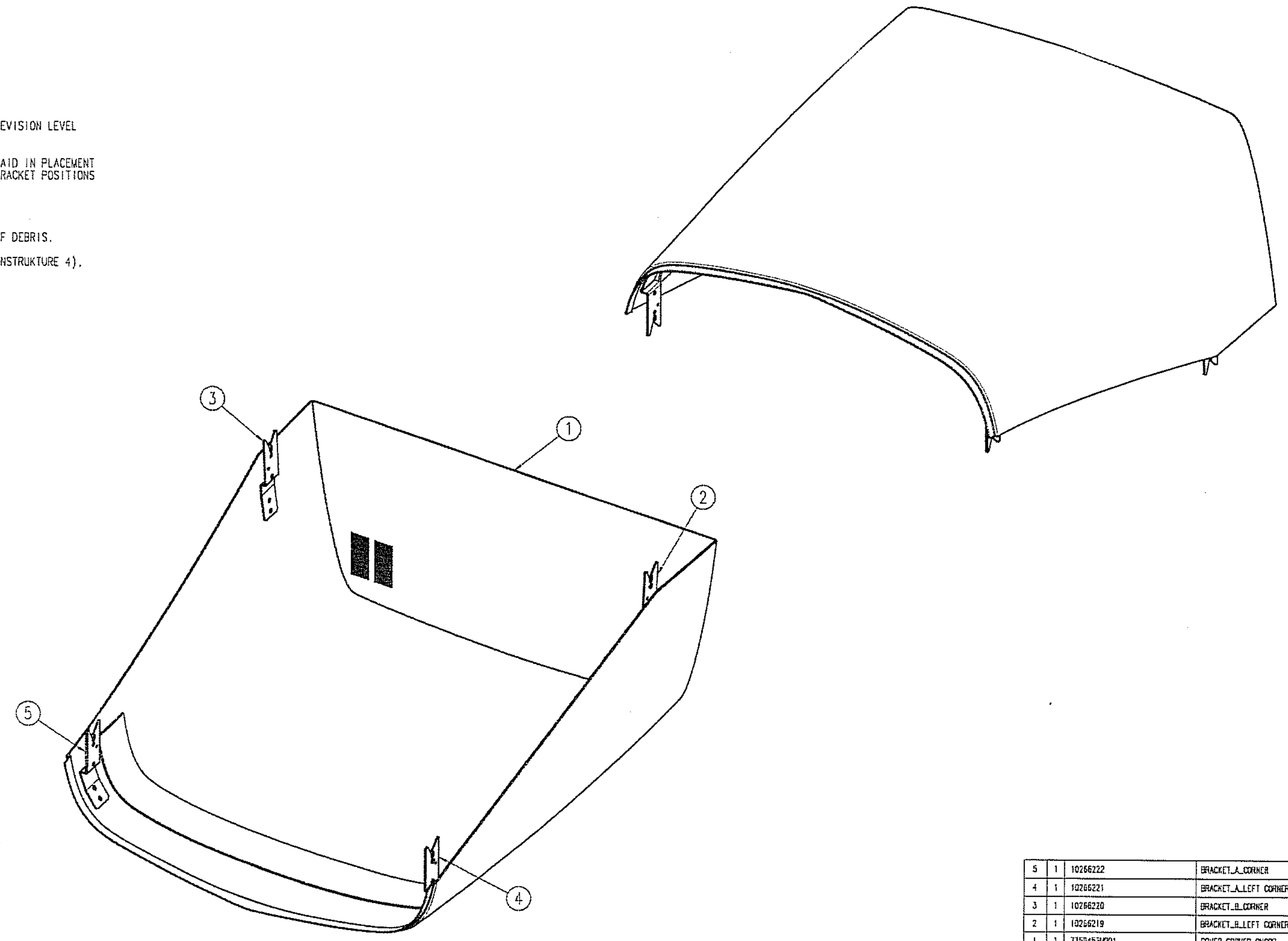

edges of undefined shape: ISO 13715

Rz63 +0.3 -0.1 +0.3 +0.1

ITEM	QTY	PART OR IDENTIFYING NUMBER	NOMENCLATURE OR DESCRIPTION
5	1	10266222	BRACKET_A_CORNER
4	1	10266221	BRACKET_A_LEFT CORNER
3	1	10266220	BRACKET_B_CORNER
2	1	10266219	BRACKET_B_LEFT CORNER
1	1	7359453M001	COVER_CORNER_ONCOR - POLYESTER, FIBERGLASS REINFORCED

Mod.-No.	Name	Date
--	--	--
--	--	--
--	--	--
--	--	--
--	--	--
--	--	--
		30.11.06

Modification History

UNLESS OTHERWISE SPECIFIED

☐ ELECTRICAL DWG PER ANSI Y32.2
☐ MECHANICAL DWG PER ANSI Y14.5
☐ WELD SYMBOLS PER ANSI A2.4
☐ SCREW THREAD PER ANSI Y14.6
☒ LEADING DIMENSIONS IN INCHES
☐ BREAK ALL SHARP EDGES .015 MAX.
√ MAX. ALL MACHINED SURFACES PER ANSI B46.1

DECIMALS
.X ± --
.XX ± .06
.XXX ± .040

ANGLES
± 1°

Material	--
Part-No.	--
Surface	--
Surface-No.	--
Surface in m²	--
General Tolerance	~~ISO 2768 mK~~
Tolerance	~~ISO 8015~~
Surface	~~ISO 1302~~

Dimensions to be checked at approval

	Dept./Name	Date/Signature
Author	W. KOWALSKI	
Checked	see SAP/EDM	
Approval	see SAP/EDM	
Modification No.	--	

[redacted]edical Solutions

COVER_CORNER_ONCOR

Part-No. | Doc-Type | Index | Rev. | Type-No.
7359453EZG-01P- 2 -

Scale 1:5 | Drawing State Draft | • I-DEAS •

A1

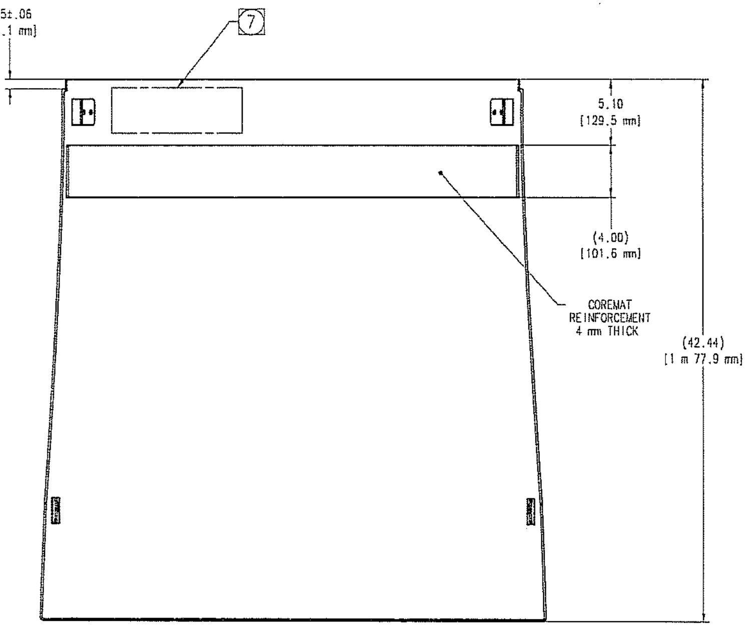
.75±.06
[19.1 mm]
7
5.10
[129.5 mm]
(4.00)
[101.6 mm]
COREMAT
REINFORCEMENT
4 mm THICK
(42.44)
[1 m 77.9 mm]

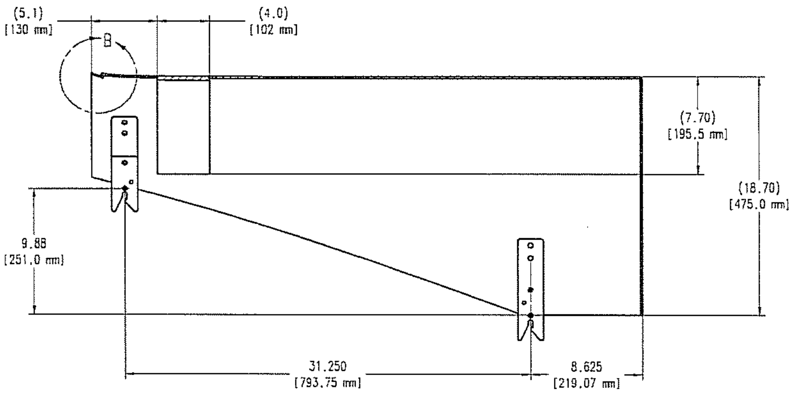
(5.1)
[130 mm]
(4.0)
[102 mm]
B
(7.70)
[195.5 mm]
(18.70)
[475.0 mm]
9.88
[251.0 mm]
31.250
[793.75 mm]
8.625
[219.07 mm]

SECTION A-A

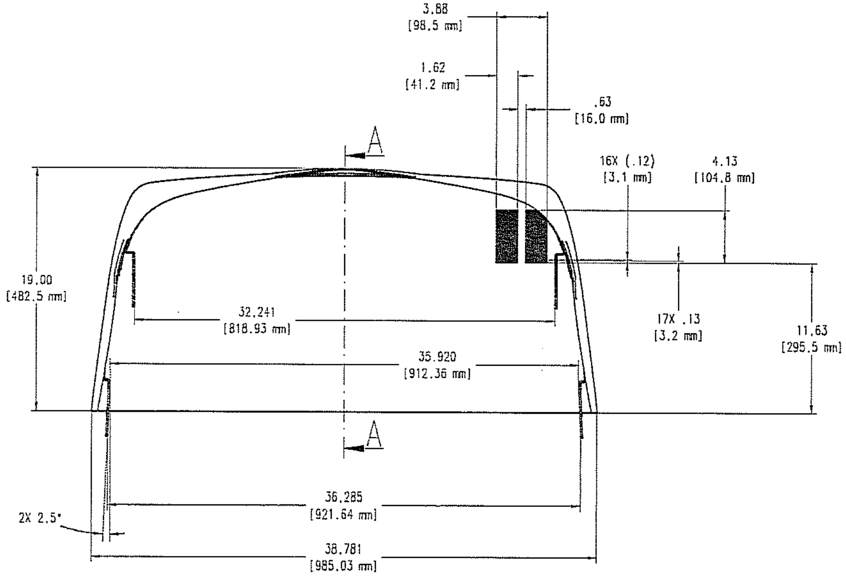
3.88
[98.5 mm]
1.62
[41.2 mm]
.63
[16.0 mm]
A
16X (.12)
[3.1 mm]
4.13
[104.8 mm]
19.00
[482.5 mm]
32.241
[818.93 mm]
17X .13
[3.2 mm]
11.63
[295.5 mm]
35.920
[912.36 mm]
A
36.285
[921.64 mm]
2X 2.5°
38.781
[985.03 mm]

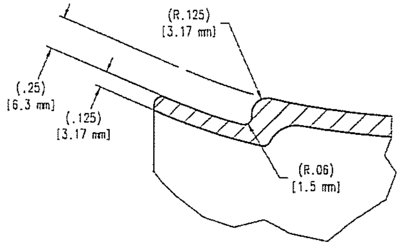
(R.125)
[3.17 mm]
(.25)
[6.3 mm]
(.125)
[3.17 mm]
(R.06)
[1.5 mm]

DETAIL B
SCALE 2/1

edges of undefined shape: ISO 13715
Rz63
-0.3
-0.1
+0.3
+0.1

Mod.-No.	Name	Date
--	--	--
--	--	--
--	--	--
--	--	--
--	--	--
--	--	--
		30.11.06

Modification History

UNLESS OTHERWISE SPECIFIED

- ☐ ELECTRICAL DWG PER ANSI Y32.2
- ☐ MECHANICAL DWG PER ANSI Y14.5
- ☐ WELD SYMBOLS PER ANSI A2.4
- ☐ SCREW THREAD PER ANSI Y14.6
- ☒ LEADING DIMENSIONS IN INCHES
- ☒ BREAK ALL SHARP EDGES .015 MAX.
- √ MAX. ALL MACHINED SURFACES PER ANSI B46.1

DECIMALS
.X ± --
.XX ± .06
.XXX ± .040
ANGLES
± 1°

Material —
Part-No. —
Surface —
Surface-No. —
Surface in m² —
General Tolerance ~~ISO 2768 mK~~
Tolerance ~~ISO 8015~~
Surface ~~ISO 1302~~
Dimensions to be checked at approval

[redacted] Medical Solutions

Dept./Name		Date/Signature
Author	W. KOWALSKI	
Checked	see SAP/EDM	
Approval	see SAP/EDM	

Modification No. --

COVER_CORNER_ONCOR

Part-No. | Doc-Type | Index | Rev. | Type-No.
7359453EZG-02M- 2 -

Scale 1:5
Drawing State Draft
• I-DEAS •
A1

NOTES:

1. THIS IS A CRITICAL TO FUNCTION (CTF) DRAWING. NON-DIMENSIONED PART GEOMETRY OF FIBERGLASS SURFACES TO BE CONTROLLED BY ASSOCIATED I-DEAS 3D MODEL, NUMBER 7359503.
2. FIBERGLASS RESIN SYSTEM SHALL BE CERTIFIED TO MEET UL94VO.
3. WALL THICKNESS OF OPEN MOLDED FIBERGLASS PARTS TO BE .13-.19" [3.3-4.8 mm].
4. RADII OF FIBERGLASS PARTS TO BE .13-.19" [3.3-4.8 mm] EXCEPT AS NOTED.

TOLERANCE FOR OPEN MOLDED FIBERGLASS PARTS, UNLESS OTHERWISE NOTED:

5. TRIM SURFACE ±.04"
FROM DATUM TO STARTING BRACKET OF BRACKET PATTERN ±.04"
FROM DATUM TO STARTING HOLE OF HOLE PATTERN ±.04"
BRACKET TO BRACKET LOCATION ±.02"
HOLE TO HOLE LOCATION ±.02"
HOLE DIAMETER 0 TO [0.-11.00 mm] .433 +.006" -.014"
HOLE DIAMETER OVER [11.00-11.00+ mm] .433 +.035" -.045"
6. PROVIDE PROTECTIVE CONTAINER AND IDENTIFY IT WITH PART NO. AND APPLICABLE REVISION LEVEL.

$\boxed{7}$ PERMANENTLY MARK PART WITH THE DRAWING NUMBER AND REVISION LEVEL APPROXIMATELY WHERE SHOWN.

8. COREMAT AND BALSA WOOD REFERENCE DIMENSIONS SHOULD BE USED TO AID IN PLACEMENT AND CUT-CUT PATTERNS. REINFORCEMENT SHALL NOT INTERFERE WITH BRACKET POSITIONS OR TRIM EDGES.
9. DIMENSIONAL LIMITS APPLY AFTER PLATING (OR OTHER FINISH).
10. PROTECT THREADS FROM DAMAGE AND ASSURE THAT THEY REMAIN FREE OF DEBRIS.
11. COLOR MATCH TO SIEMENS WHITE 610 WITH MICROTEXTURE (FEINSTRUKTURE 4).
12. ATTACH BRACKETS WITH EPOXY AND THEN COVER WITH FIBERGLASS.

$\boxed{13}$ TORQUE TO 156 LBF-IN [18Nm].

$\boxed{14}$ VENDOR OPTION - ALTERNATE FABRICATION:
OMIT ITEM 6 AND SUBSTITUTE TWO LAYERS OF STRUCTURAL FIBERGLASS TO INDICATED SQUARE PERIMETER.

$\boxed{15}$ DO NOT TEXTURE PAINT, FAR SIDE OF LIP AS SHOWN, FROM "A" TO "B".

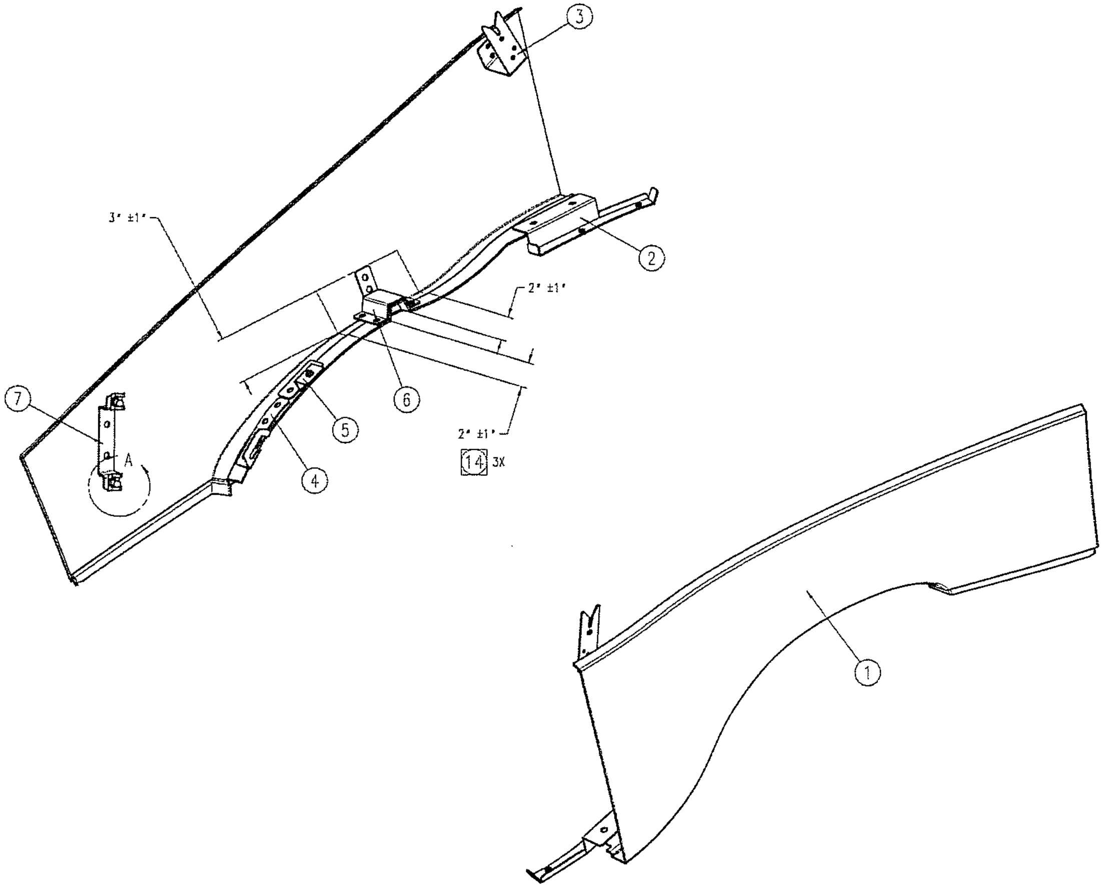

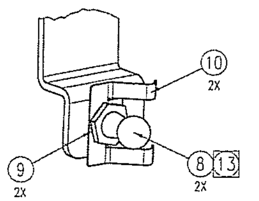

DETAIL A
SCALE 1/1

edges of undefined shape: ISO 13715

–	–	–
–	–	–
–	–	–
–	–	–
–	–	–
–	–	–
		30.11.06
Mod.-No.	Name	Date
Modification History		

UNLESS OTHERWISE SPECIFIED

☐ ELECTRICAL DWG PER ANSI Y32.2
☒ MECHANICAL DWG PER ANSI Y14.5
☐ WELD SYMBOLS PER ANSI A2.4
☐ SCREW THREAD PER ANSI Y14.6
☒ LEADING DIMENSIONS IN INCHES
☒ BREAK ALL SHARP EDGES .015 MAX.
√ MAX. ALL MACHINED SURFACES PER ANSI B46.1

DECIMALS
.X ± --
.XX ± .03
.XXX ± .01
ANGLES
±---°

ITEM	QTY	PART OR IDENTIFYING NUMBER	NOMENCLATURE OR DESCRIPTION
10	2	10266205	CLIP_SPRING_401_020THK
9	2	9712K65	DISK SPRING_BELLEVILLE_31710_62500_022THK_MCMASTER
8	2	9512K83	BALL STUD_5/16-18_13MM
7	1	10266206	BRACKET_D_PIVOT_COLLIMATOR
6	1	10266207	BRACKET_U_COLLIMATOR
5	1	10266211	BRACKET_Z_COLLIMATOR
4	1	10266233	BRACKET_RIGHT_COLLIMATOR
3	1	10266232	BRACKET_A_RIGHT_COLLIMATOR
2	1	10266231	BRACKET_B_RIGHT_COLLIMATOR
1	1	7359503W501	COVER_COLLIMATOR_RIGHT - POLYESTER, FIBERGLASS REINFORCED

Material	—
Part-No.	--
Surface	—
Surface-No.	—
Surface in cm²	—
General Tolerance	~~ISO 2768-mK~~
Tolerance	~~ISO 8015~~
Surface	~~ISO 1302~~
Dimensions to be checked at approval	

Dept./Name		Date/Signature
Author	W. KOWALSKI	
Checked	see SAP/EDM	
Approval	see SAP/EDM	
Modification No.	--	

[redacted] Solutions

CVR_COLLIMATOR_RIGHT_ONCOR

Part-No. [Doc-Type] Index [Rev.] Type-No.
7359503EZG-01P- 2 -

Scale 1:5 Drawing State Draft • I-DEAS •

A1

First Application
xxxxxxx
xxxxx

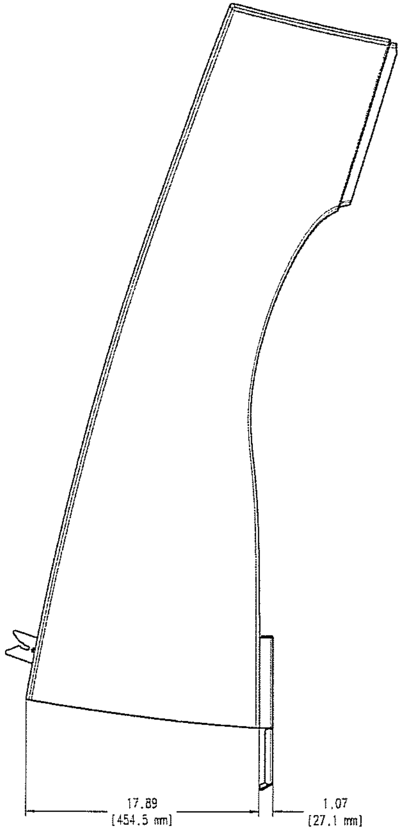
17.89
[454.5 mm]
1.07
[27.1 mm]

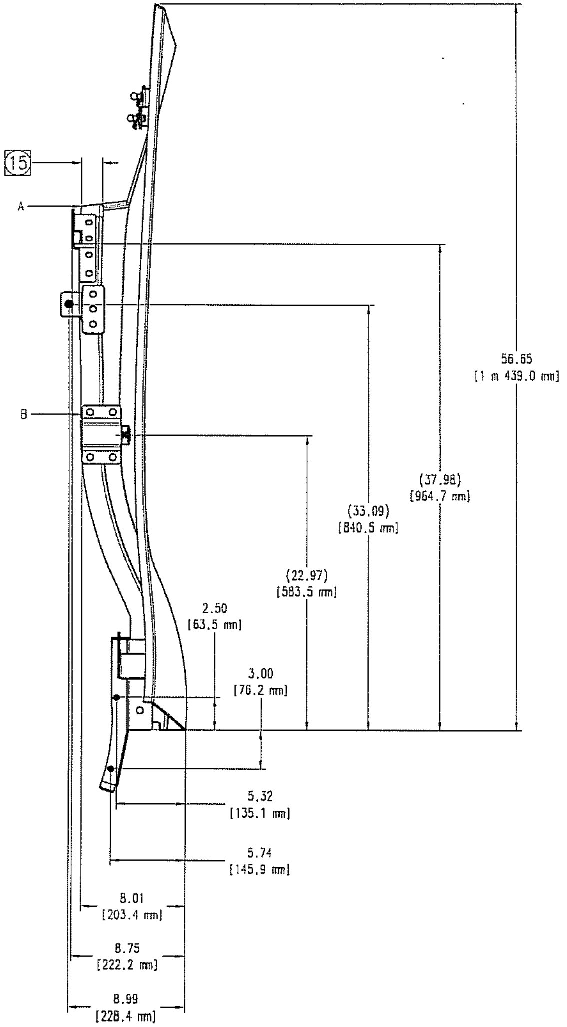
15
A
B
56.65
[1 m 439.0 mm]
(37.98)
[964.7 mm]
(33.09)
[840.5 mm]
(22.97)
[583.5 mm]
2.50
[63.5 mm]
3.00
[76.2 mm]
5.32
[135.1 mm]
5.74
[145.9 mm]
8.01
[203.4 mm]
8.75
[222.2 mm]
8.99
[228.4 mm]

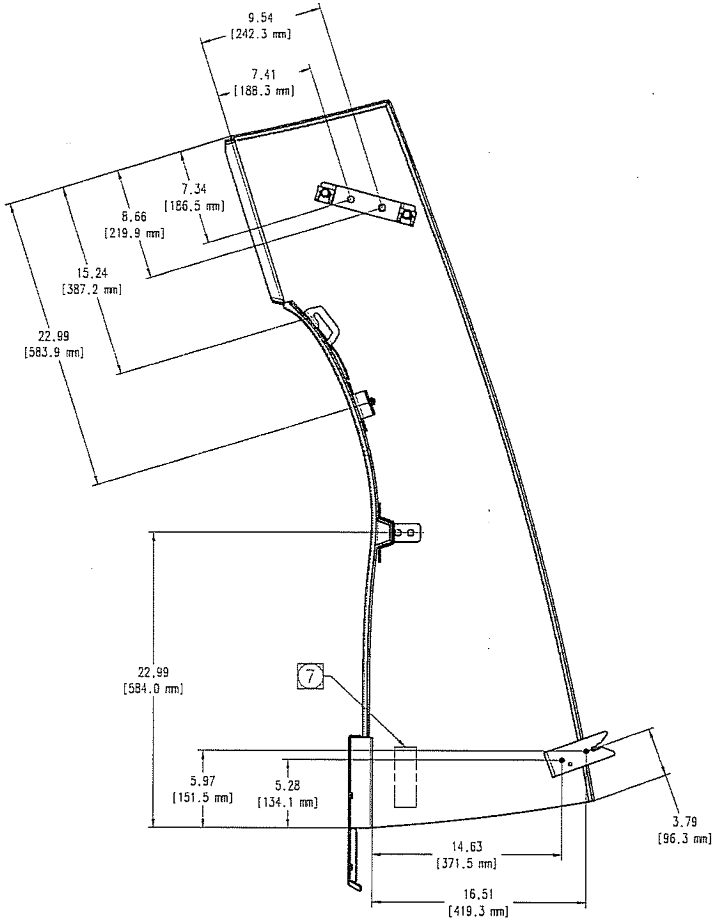
9.54
[242.3 mm]
7.41
[188.3 mm]
7.34
[186.5 mm]
8.66
[219.9 mm]
15.24
[387.2 mm]
22.99
[583.9 mm]
22.99
[584.0 mm]
7
5.97
[151.5 mm]
5.28
[134.1 mm]
14.63
[371.5 mm]
16.51
[419.3 mm]
3.79
[96.3 mm]

edges of undefined shape: ISO 13715
-0.3 / -0.1
+0.3 / +0.1
Rz63

–	–	–
–	–	–
–	–	–
–	–	–
–	–	–
–	–	–
		30.11.06
Mod.-No.	Name	Date

Modification History

UNLESS OTHERWISE SPECIFIED

☐ ELECTRICAL DWG PER ANSI Y32.2
☐ MECHANICAL DWG PER ANSI Y14.5
☐ WELD SYMBOLS PER ANSI A2.4
☐ SCREW THREAD PER ANSI Y14.6
☒ LEADING DIMENSIONS IN INCHES
☐ BREAK ALL SHARP EDGES .015 MAX.
MAX. ALL MACHINED SURFACES PER ANSI B46.1

DECIMALS
.X ± --
.XX ± ---
.XXX ± ----
ANGLES
±---°

Material —
—
Part-No. —
Surface —
Surface-No. —
Surface in m² —
General Tolerance ~~ISO 2768-mK~~
Tolerance ~~ISO 8015~~
Surface ~~ISO 1302~~
Dimensions to be checked at approval

[redacted] Medical Solutions

	Dept./Name	Date/Signature
Author	W. KOWALSKI	
Checked	see SAP/EDM	
Approval	see SAP/EDM	

Modification No. --

CVR_COLLIMATOR_RIGHT_ONCOR

Part-No. | Doc-Type | Index | Rev. | Type-No.
7359503EZG-02M- 2 -

Scale 1:5 | Drawing State Draft | • I-DEAS •

A1

B1	REDRAWN IN IDEAS

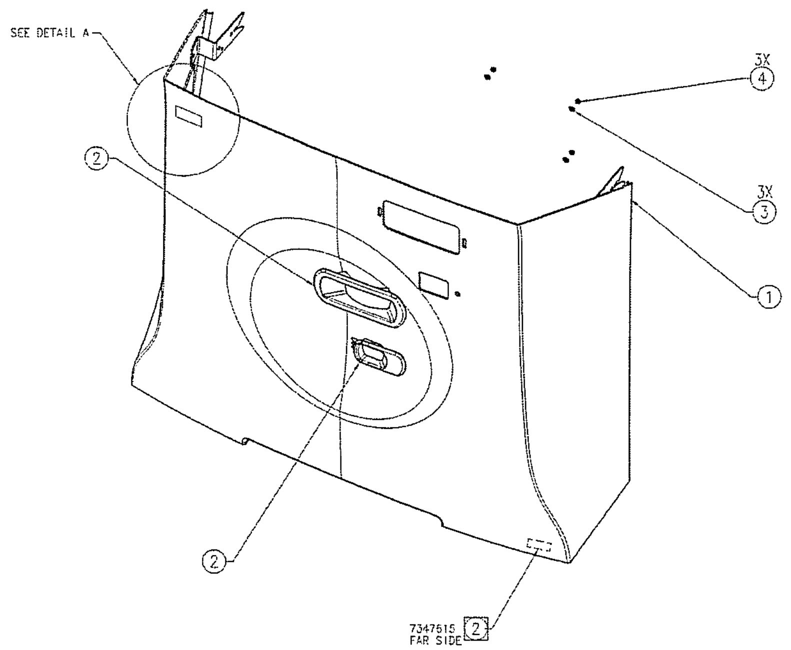

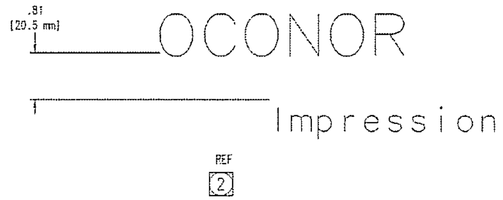

DETAIL A

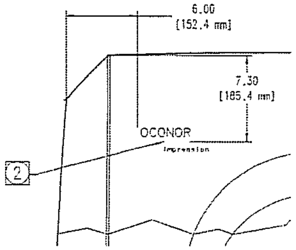

NOTES:

1. PROVIDE PROTECTIVE CONTAINER MARKED WITH DRAWING NO. AND REVISION LEVEL. PACKAGING SHALL PROTECT SOFT BEZEL MATERIAL.

2 PART SHALL BE PERMANENTLY MARKED WITH THE PART NUMBER AND REVISION LEVEL OF INDIVIDUAL PART DRAWING APPROXIMATELY WHERE SHOWN.

3 USING SUPPLIED ARTWORK AND DETAILS PER 5859058 , APPLY "OCONOR" AND Impression" AS SHOWN.

edges of undefined shape: ISO 13715

+0.3
-0.1

+0.3
+0.1

Rz63

--	--	--
--	--	--
--	--	--
--	--	--
--	--	--
--	--	--
		13.12.06
Mod.-No.	Name	Date
Modification History		

UNLESS OTHERWISE SPECIFIED

☐ ELECTRICAL DWG PER ANSI Y32.2
☒ MECHANICAL DWG PER ANSI Y14.5
☐ WELD SYMBOLS PER ANSI A2.4
☐ SCREW THREAD PER ANSI Y14.6
☒ LEADING DIMENSIONS IN INCHES
☒ BREAK ALL SHARP EDGES .015 MAX.
MAX. ALL MACHINED SURFACES PER ANSI B46.1

DECIMALS
.X ± --
.XX ± .03
.XXX ± .01

ANGLES
± --°

Item	Qty	Part #	Name	Material
4	3	8627A011	NUTS KEP 10 24 SST MC MASTER	
3	3	9P16120	WSHR FLAT #10 SST 10	GENERIC ISOTROPIC STEEL
2	1	7347680	BEZELS ONCOR OPTIGARD	
1	1	7347607	COVER ONCOR OPTIGARD	

Material: --
Part-No. --
Surface --
Surface --
Surface --

	Dept./Name	Date/Signature
Author	CAR-T	
Checked	see SAP/EDM	
Approval	see SAP/EDM	
Modification No.	--	

General Tolerance ISO 2768-mK

Dimensions to be checked if marked

[redacted] Solutions

COVER ASSY ONCOR IMP OPTIGARD

Part-No. [Doc-Type] Index Rev. Type-No.
7347615EZG-01M-00-S050U

Scale 1:5 Drawing State Draft • I-DEAS •

A1

Enlargement not to scale !
The reproduction, transmission or use of this document or its contents is not permitted without express written authority. Offenders will be liable for damages. All rights, including rights created by patent grant or registration of a utility model or design, are reserved.

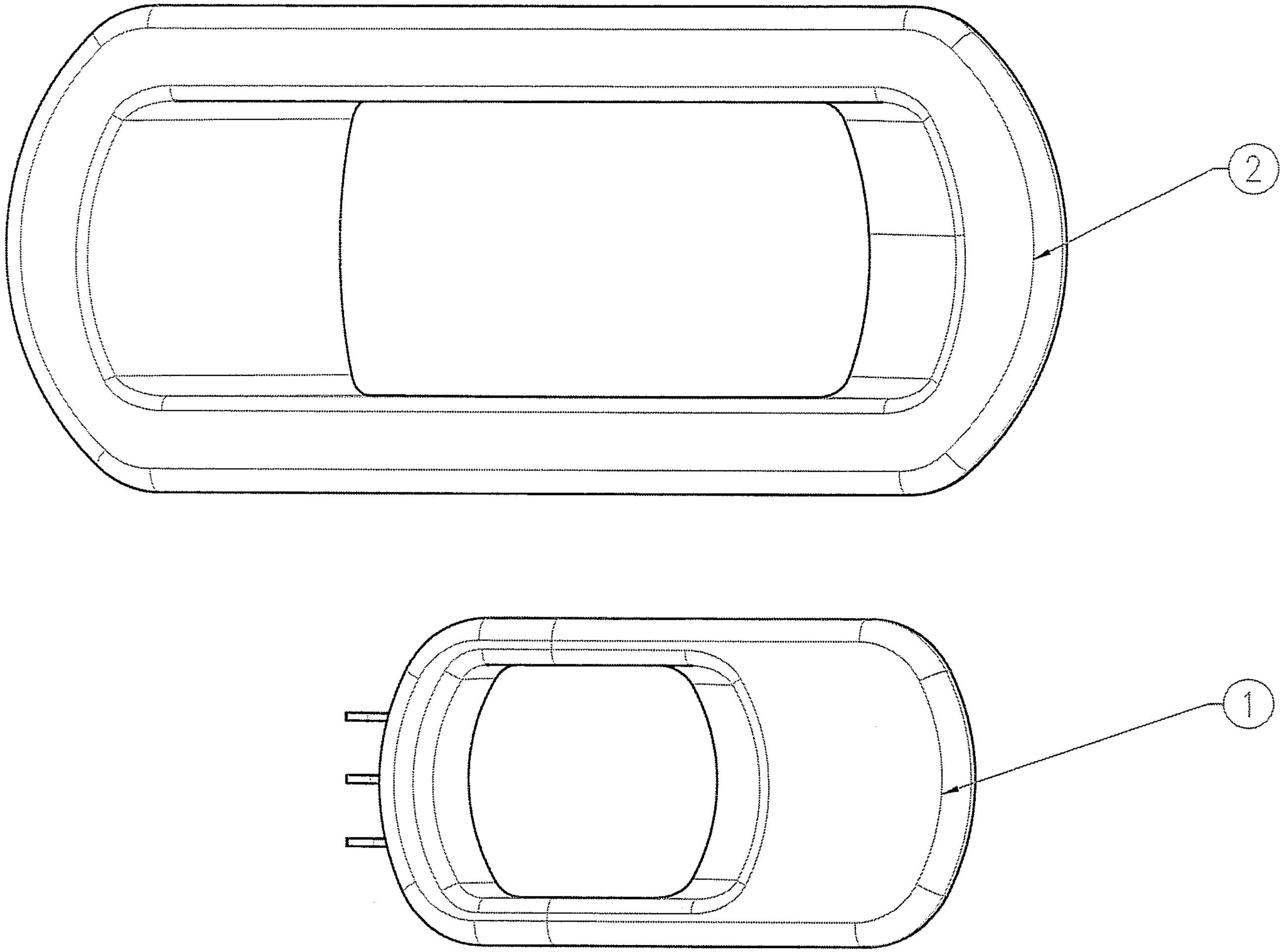

Item	Qty	Part #	Name	Material
2	1	10266417	BEZEL_OPTIGUARD_LARGE	
1	1	10266415	BEZEL_OPTIGUARD_SMALL	

–	–	–
–	–	–
–	–	–
–	–	–
–	–	–
–	–	–
		21.12.06
Mod.-No.	Name	Date

Modification History

UNLESS OTHERWISE SPECIFIED

☐ ELECTRICAL DWG PER ANSI Y32.2
☒ MECHANICAL DWG PER ANSI Y14.5
☐ WELD SYMBOLS PER ANSI A2.4
☐ SCREW THREAD PER ANSI Y14.6
☒ LEADING DIMENSIONS IN INCHES
☒ BREAK ALL SHARP EDGES .015 MAX.
—√ MAX. ALL MACHINED SURFACES PER ANSI B46.1

DECIMALS
.X ± --
.XX ± .03
.XXX ± .01

ANGLES
±---°

Fit Dimension	Deviation
–	–
–	–
–	–
–	–

~~Dimensions in mm~~

Material --
--

Part-No. --

Surface --
Surface-No. --
Surface in dm^2 --

General Tolerance ~~ISO 2768-mK~~

Tolerance ~~ISO 8015~~
Surface ~~ISO 1302~~

Dimensions to be checked at approval

[redacted]
Medical Solutions

	Dept./Name	Date/Signature
Author	CAR-T	
Checked	see SAP/EDM	
Approval	see SAP/EDM	

Modification No. --

BEZELS_ONCOR_OPTIGARD

Part-No. | Doc-Type | Index | Rev. | Type-No.
7347680EZG-01M-00-S050U

Scale 1:1
Drawing State Draft
* I-DEAS *
A3

First Application
xxxxxxx
xxxxx

G1	REDRAWN IN IDEAS		

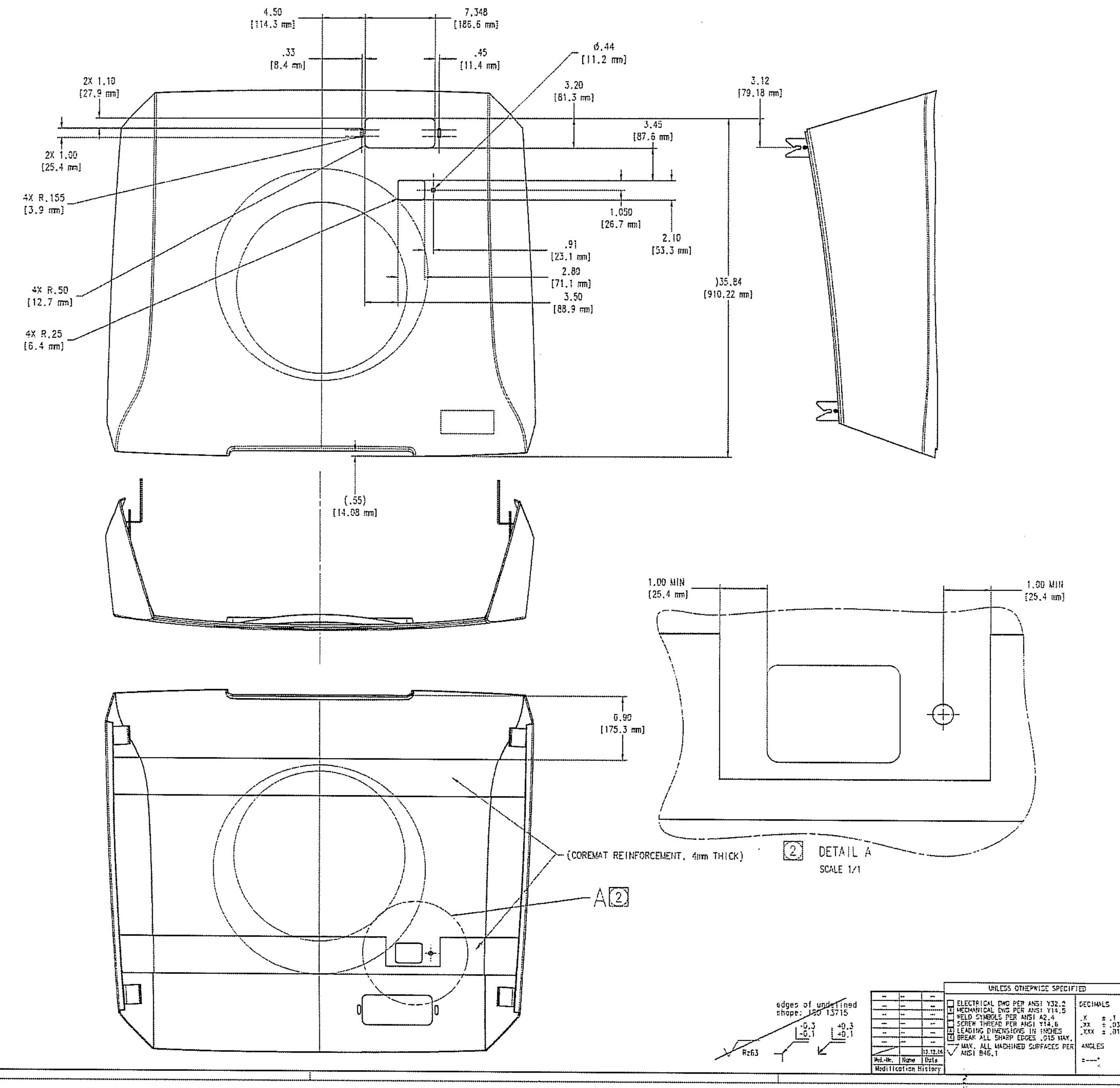
4.50 [114.3 mm]
7.348 [186.6 mm]
.33 [8.4 mm]
.45 [11.4 mm]
ø.44 [11.2 mm]
2X 1.10 [27.9 mm]
3.20 [81.3 mm]
3.12 [79.18 mm]
3.45 [87.6 mm]
2X 1.00 [25.4 mm]
4X R.155 [3.9 mm]
1.050 [26.7 mm]
2.10 [53.3 mm]
.91 [23.1 mm]
4X R.50 [12.7 mm]
2.80 [71.1 mm]
3.50 [88.9 mm]
35.84 [910.22 mm]
4X R.25 [6.4 mm]
(.55) [14.08 mm]
1.00 MIN [25.4 mm]
1.00 MIN [25.4 mm]
6.90 [175.3 mm]
(COREMAT REINFORCEMENT, 4mm THICK)
2 DETAIL A
SCALE 1/1
A 2
edges of undefined shape: ISO 13715
Rz63
-0.3 -0.1
+0.3 +0.1

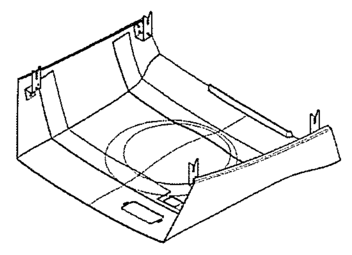

NOTES:

① MAKE FROM 5857058 OR 5864736 , INCLUDING PAINT COLOR BUT EXCLUDING AT ARTWORK 'Avante-Garde' OR 'IMPRESSION'.

② STIFFENING REINFORCEMENT IN THIS AREA AS NEEDED. MAINTAIN INCH CLEARENCE (NO ADDED MATERIAL THICKNESS) FROM END OF 2.1 X 2.8 CUT-OUT AND .44 DIA THRU HOLE AS NEEDED.

Item	Qty	Part #	Name	Material
5	1	7347607M001	COVER ONCOR OPTIGARD	
4	1	10266240	BRACKET A LEFT CENTER	
3	1	10266239	BRACKET A CENTER	
2	1	10266238	BRACKET B LEFT CENTER BRACKET	
1	1	10266237	BRACKET CENTER BRACKET B	

Mod.-No.	Name	Date
--	--	--
--	--	--
--	--	--
--	--	--
--	--	--
--	--	--
		13.12.06

Modification History

UNLESS OTHERWISE SPECIFIED

☐ ELECTRICAL DWG PER ANSI Y32.2
☒ MECHANICAL DWG PER ANSI Y14.5
☐ WELD SYMBOLS PER ANSI A2.4
☐ SCREW THREAD PER ANSI Y14.6
☒ LEADING DIMENSIONS IN INCHES
☒ BREAK ALL SHARP EDGES .015 MAX.
MAX. ALL MACHINED SURFACES PER ANSI B46.1

DECIMALS
.X ± .1
.XX ± .03
.XXX ± .01
ANGLES
± --°

Material --
--
Part-No. --
Surface --
Surface-No. --
Surface to be --
General Tolerance ~~ISO 2768-mK~~
Tolerance ~~ISO 8015~~
Surface ~~ISO 1302~~
Dimensions to be checked at approval

[redacted]

	Dept./Name	Date/Signature
Author	CAR-T	
Checked	see SAP/EDM	
Approved	see SAP/EDM	

Modification No. --

COVER ONCOR OPTIGARD

Part-No. (Doc-Type) Index Rev. Type-No.
7347607EZG-01M-00-S050U

Scale 1:1 Drawing State Draft • I-DEAS •

A1

NOTES:

1. PROVIDE PROTECTIVE CONTAINER AND IDENTIFY IT WITH PART NO. AND APPLICABLE REVISION LEVEL.

2 TOLERANCE FOR OPEN MOLDED FIBERGLASS PARTS, UNLESS OTHERWISE NOTED:

TRIM SURFACE ±.04"
FROM DATUM TO STARTING BRACKET OF BRACKET PATTERN ±.04"
FROM DATUM TO STARTING HOLE OF HOLE PATTERN ±.04"
BRACKET TO BRACKET LOCATION ±.02"
HOLE TO HOLE LOCATION ±.02"
HOLE DIAMETER 0 TO [0.-11.00 mm] .433 +.006" -.014"
HOLE DIAMETER OVER [11.00-11.00+ mm] .433 +.035" -.045"

3 COLOR TO MATCH SIEMENS MEDIUM BASIC 701 WITH MICROTEXTURE (FEINSTRUKTURE 4).

4 PART SHAAL BE PERMANENTLY MARKED WITH THE PART NUMBER AND REVISION LEVEL OF INDIVIDUAL PART DRAWING APPROXIMATELY WHERE SHOWN.

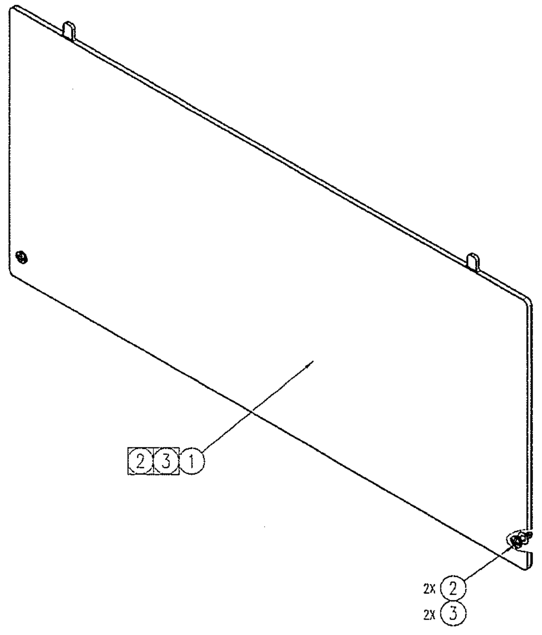

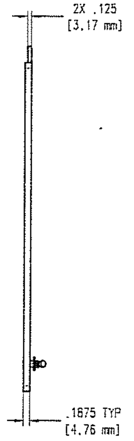
2X .125
[3.17 mm]
.1875 TYP
[4.76 mm]

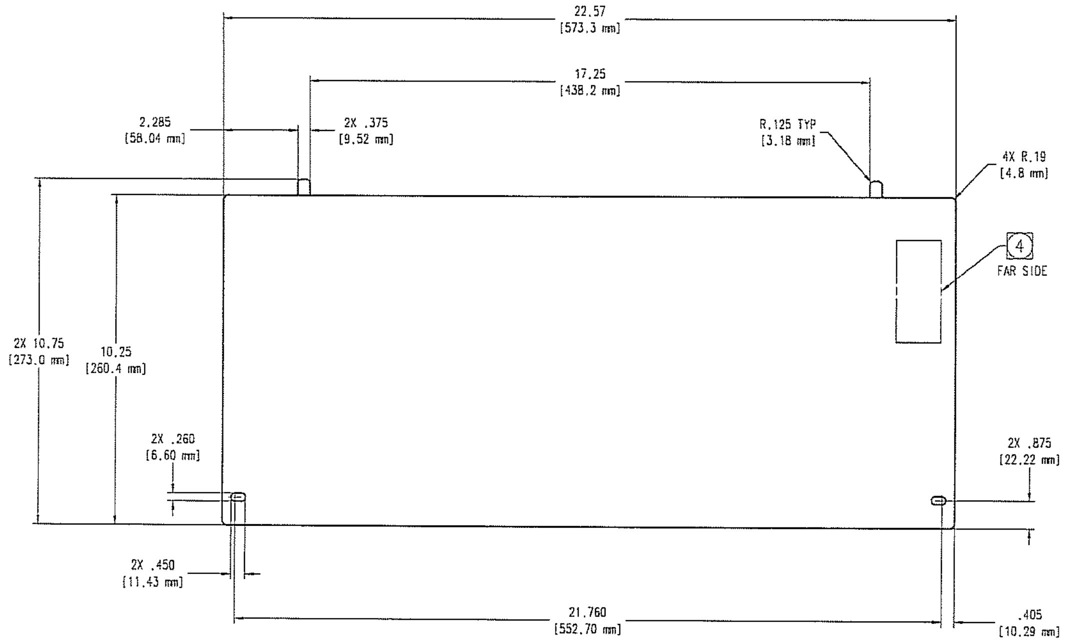
22.57
[573.3 mm]
17.25
[438.2 mm]
2.285
[58.04 mm]
2X .375
[9.52 mm]
R.125 TYP
[3.18 mm]
4X R.19
[4.8 mm]
4
FAR SIDE
2X 10.75
[273.0 mm]
10.25
[260.4 mm]
2X .260
[6.60 mm]
2X .875
[22.22 mm]
2X .450
[11.43 mm]
21.760
[552.70 mm]
.405
[10.29 mm]

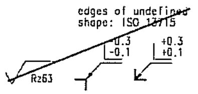
edges of undefined shape: ISO 13715
-0.3
-0.1
+0.3
+0.1
Rz63

Mod.-No.	Name	Date
–	–	–
–	–	–
–	–	–
–	–	–
–	–	–
–	–	–
		04.12.06

Modification History

UNLESS OTHERWISE SPECIFIED

☐ ELECTRICAL DWG PER ANSI Y32.2
☐ MECHANICAL DWG PER ANSI Y14.5
☐ WELD SYMBOLS PER ANSI A2.4
☐ SCREW THREAD PER ANSI Y14.6
☒ LEADING DIMENSIONS IN INCHES
☐ BREAK ALL SHARP EDGES .015 MAX.
MAX. ALL MACHINED SURFACES PER ANSI B46.1

DECIMALS
.X ± --
.XX ± ---
.XXX ± ----
ANGLES
±---°

ITEM	QTY	PART OR IDENTIFYING NUMBER	NOMENCLATURE OR DESCRIPTION
3	2	82-32-301-12	WASHER_SOUTHCO_20301A
2	2	82-19-340-16	1/4 TURN OVAL PHL_WED STEEL_SOUTHCO
1	1	5859132M001	COVER_EPID ACCES_ONCOR - POLYCARBONATE

Material —
Part-No. —
Surface —
Surface-No. —
Surface in m² —
General tolerance ~~ISO 2768-mK~~
Tolerance ~~ISO 8015~~
Surface ~~ISO 1302~~
Dimensions to be checked at approval

Dept./Name		Date/Signature
Author	W. KOWALSKI	
Checked	see SAP/EDM	
Approval	see SAP/EDM	

Modification No. --

[redacted] Solutions

COVER_EPID_ACCESS_ONCOR

Part-No.	Doc-type	Index	Rev.	Type-No.
5859132	EZG	01M	B	S050U

Scale 1:1 Drawing State Draft • I-DEAS •

A1

NOTES:

1. PROVIDE PROTECTIVE CONTAINER AND IDENTIFY IT WITH PART NO. AND APPLICABLE REVISION LEVEL.

2. TOLERANCE FOR OPEN MOLDED FIBERGLASS PARTS, UNLESS OTHERWISE NOTED:

   TRIM SURFACE ±.04"
   FROM DATUM TO STARTING BRACKET OF BRACKET PATTERN ±.04"
   FROM DATUM TO STARTING HOLE OF HOLE PATTERN ±.04"
   BRACKET TO BRACKET LOCATION ±.02"
   HOLE TO HOLE LOCATION ±.02"
   HOLE DIAMETER 0 TO .433 +.006" -.014" [11.00 mm]
   HOLE DIAMETER OVER .433 +.035" -.045" [11.00 mm]

3. COLOR TO MATCH SIEMENS MEDIUM BASIC 610 WITH MICROTEXTURE (FEINSTRUKTURE 4).

④ PART SHAAL BE PERMANENTLY MARKED WITH THE PART NUMBER AND REVISION LEVEL OF INDIVIDUAL PART DRAWING APPROXIMATELY WHERE SHOWN.

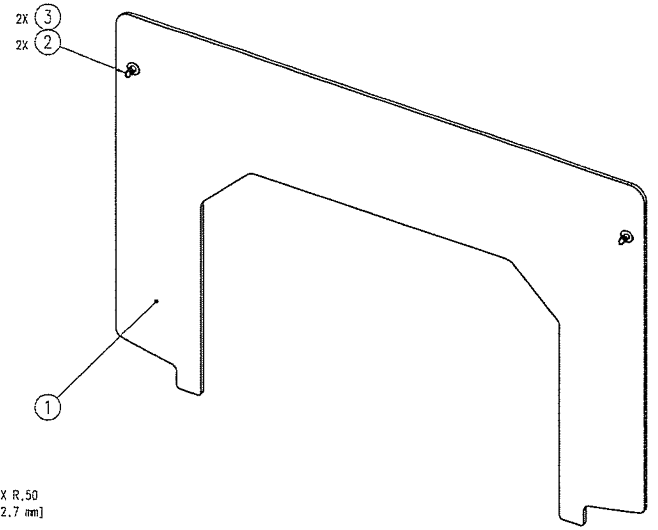

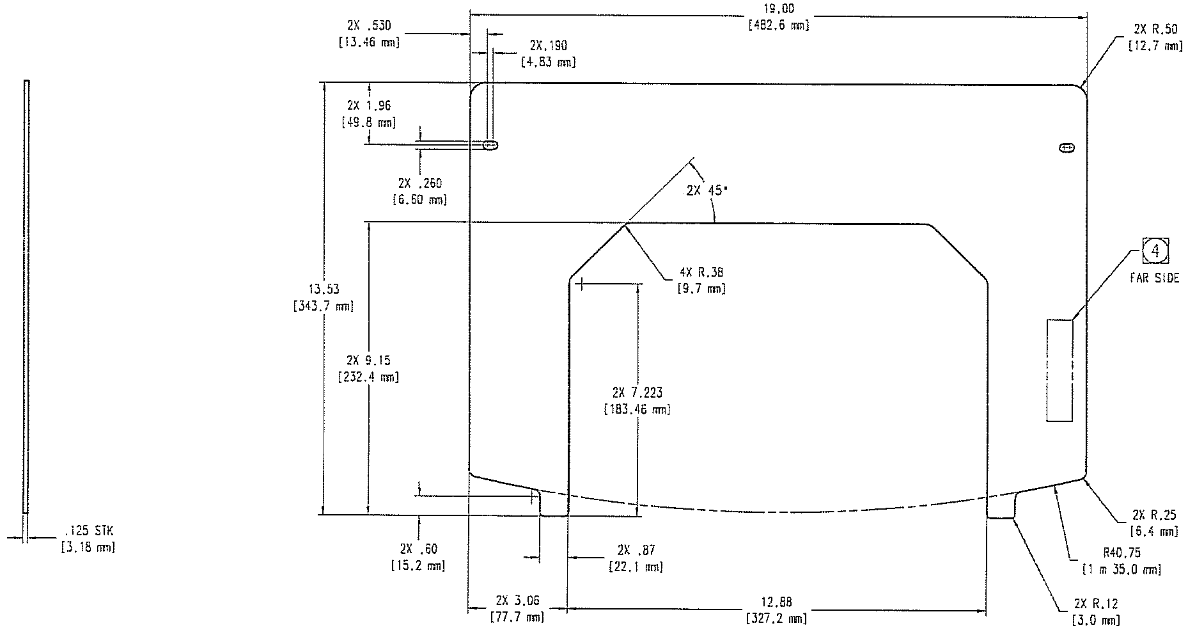
19.00
[482.6 mm]
2X .530
[13.46 mm]
2X.190
[4.83 mm]
2X R.50
[12.7 mm]
2X 1.96
[49.8 mm]
2X .260
[6.60 mm]
2X 45°
4X R.38
[9.7 mm]
④
FAR SIDE
13.53
[343.7 mm]
2X 9.15
[232.4 mm]
2X 7.223
[183.46 mm]
.125 STK
[3.18 mm]
2X .60
[15.2 mm]
2X .87
[22.1 mm]
2X R.25
[6.4 mm]
R40.75
[1 m 35.0 mm]
2X 3.06
[77.7 mm]
12.88
[327.2 mm]
2X R.12
[3.0 mm]

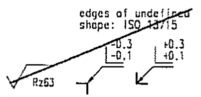
edges of undefined shape: ISO 13715
-0.3
-0.1
+0.3
+0.1
Rz63

–	–	–
–	–	–
–	–	–
–	–	–
–	–	–
–	–	–
		04.12.06
Mod.-No.	Name	Date

Modification History

UNLESS OTHERWISE SPECIFIED

☐ ELECTRICAL DWG PER ANSI Y32.2
☒ MECHANICAL DWG PER ANSI Y14.5
☐ WELD SYMBOLS PER ANSI A2.4
☐ SCREW THREAD PER ANSI Y14.6
☒ LEADING DIMENSIONS IN INCHES
☐ BREAK ALL SHARP EDGES .015 MAX.
MAX. ALL MACHINED SURFACES PER ANSI B46.1

DECIMALS
.X ± --
.XX ± .02
.XXX ± .010

ANGLES
±---°

ITEM	QTY	PART OR IDENTIFYING NUMBER	NOMENCLATURE OR DESCRIPTION
3	2	82-19-280-16	1/4TURN OVAL FHL_MED STEEL_ZN PLT_SOUTHCO
2	2	82-32-301-12	WASHER_SOUTHCO_20301A
1	1	5859199M001	COVER_FILLER_FLAT_PANEL - POLYCARBONATE-REV 2

Material —
Part-No. —
Surface —
Surface-No. —
Surface in m² —
General Tolerance ~~ISO 2768-mK~~
Tolerance ~~ISO 8015~~
Surface ~~ISO 1302~~
Dimensions to be checked at approval

	Dept./Name	Date/Signature
Author	D. NOSAL	
Checked	see SAP/EDM	
Approval	see SAP/EDM	
Modification No.	--	

[redacted] Solutions

COVER_FILLER_FLAT_PANEL

Part-No. | Doc-Type | Index | Rev. | Type-No.
5859199EZG-01M- B -S000U

Scale 1:2 | Drawing State Draft | • I-DEAS •

A1

NOTES:

1. PROVIDE PROTECTIVE CONTAINER AND IDENTIFY IT WITH PART NO. AND APPLICABLE REVISION LEVEL.

[2] TOLERANCE FOR OPEN MOLDED FIBERGLASS PARTS, UNLESS OTHERWISE NOTED:

TRIM SURFACE ±.04"
FROM DATUM TO STARTING BRACKET OF BRACKET PATTERN ±.04"
FROM DATUM TO STARTING HOLE OF HOLE PATTERN ±.04"
BRACKET TO BRACKET LOCATION ±.02"
HOLE TO HOLE LOCATION ±.02"
HOLE DIAMETER 0 TO [0.-11.00 mm] .433 +.006" -.014"
HOLE DIAMETER OVER [11.00-11.00+ mm] .433 +.035" -.045"

[3] COLOR TO MATCH SIEMENS MEDIUM BASIC 610 WITH MICROTEXTURE (FEINSTRUKTURE 4).

[4] PART SHAAL BE PERMANENTLY MARKED WITH THE PART NUMBER AND REVISION LEVEL OF INDIVIDUAL PART DRAWING APPROXIMATELY WHERE SHOWN.

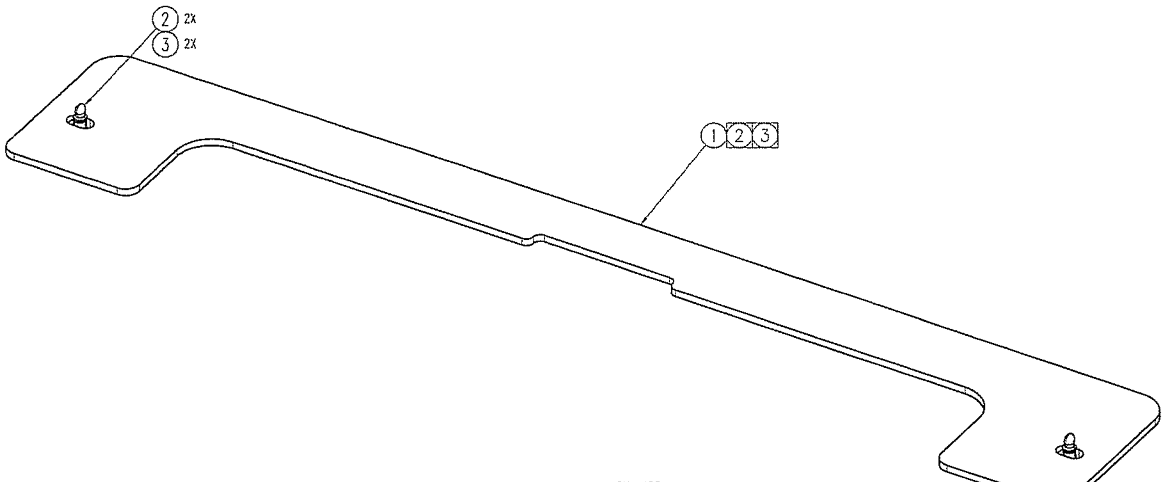

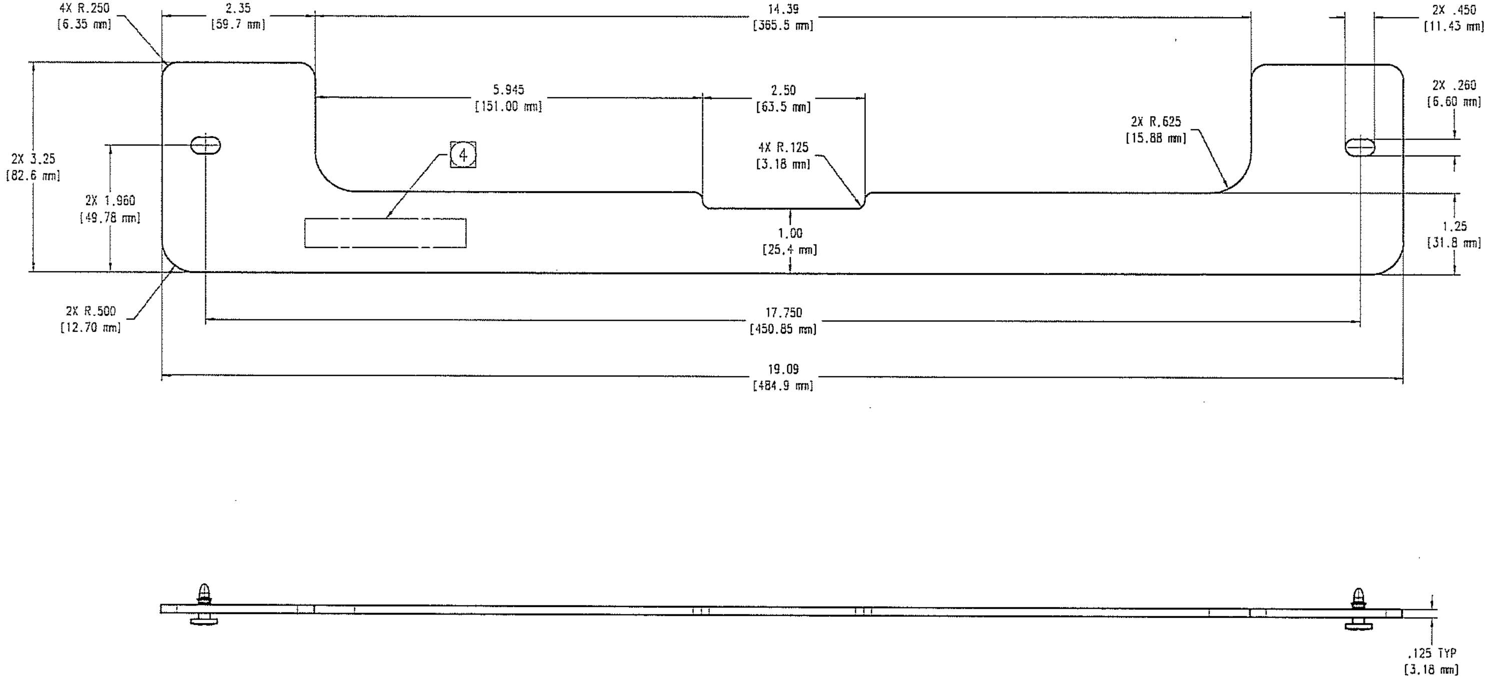
4X R.250
[6.35 mm]
2.35
[59.7 mm]
14.39
[365.5 mm]
2X .450
[11.43 mm]
5.945
[151.00 mm]
2.50
[63.5 mm]
2X .260
[6.60 mm]
2X R.625
[15.88 mm]
2X 3.25
[82.6 mm]
④
4X R.125
[3.18 mm]
2X 1.960
[49.78 mm]
1.00
[25.4 mm]
1.25
[31.8 mm]
2X R.500
[12.70 mm]
17.750
[450.85 mm]
19.09
[484.9 mm]
.125 TYP
[3.18 mm]

edges of undefined shape: ISO 13715
Rz63
+0.3 -0.1
+0.3 +0.1

--	--	--
--	--	--
--	--	--
--	--	--
--	--	--
--	--	--
		04.12.06
Mod.-No.	Name	Date

Modification History

UNLESS OTHERWISE SPECIFIED

☐ ELECTRICAL DWG PER ANSI Y32.2
☐ MECHANICAL DWG PER ANSI Y14.5
☐ WELD SYMBOLS PER ANSI A2.4
☐ SCREW THREAD PER ANSI Y14.6
☒ LEADING DIMENSIONS IN INCHES
☐ BREAK ALL SHARP EDGES .015 MAX.
--√ MAX. ALL MACHINED SURFACES PER ANSI B46.1

DECIMALS
.X ± --
.XX ± ---
.XXX ± ----
ANGLES
±---°

ITEM	QTY	PART OR IDENTIFYING NUMBER	NOMENCLATURE OR DESCRIPTION
3	2	82-32-301-12, SOUTHCO	WASHER_SOUTHCO_203DIA
2	2	82-19-280-16, SOUTHCO	1/4TURN OVAL PHL_MED STEEL_ZN PLT_SOUTHCO
1	1	5859207W001	COVER_FILLER_BEAMVIEW - POLYCARBONATE

Material —
—
Part-No. —
Surface —
Surface-No. —
Surface in cm² —
General Tolerance ~~ISO 2768-mK~~
Tolerance ~~ISO 8015~~
Surface ~~ISO 1302~~
Dimensions to be checked at approval

[redacted]

Dept./Name		Date/Signature
Author	W. KOWALSKI	
Checked	see SAP/EDM	
Approval	see SAP/EDM	

Modification No. ---

COVER_FILLER_BEAMVIEW

Part-No. | Doc-Type | Index | Rev. | Type-No.
5859207EZG-01M- A -S050U

Scale 1:1 | Drawing State Draft | • I-DEAS •

A1

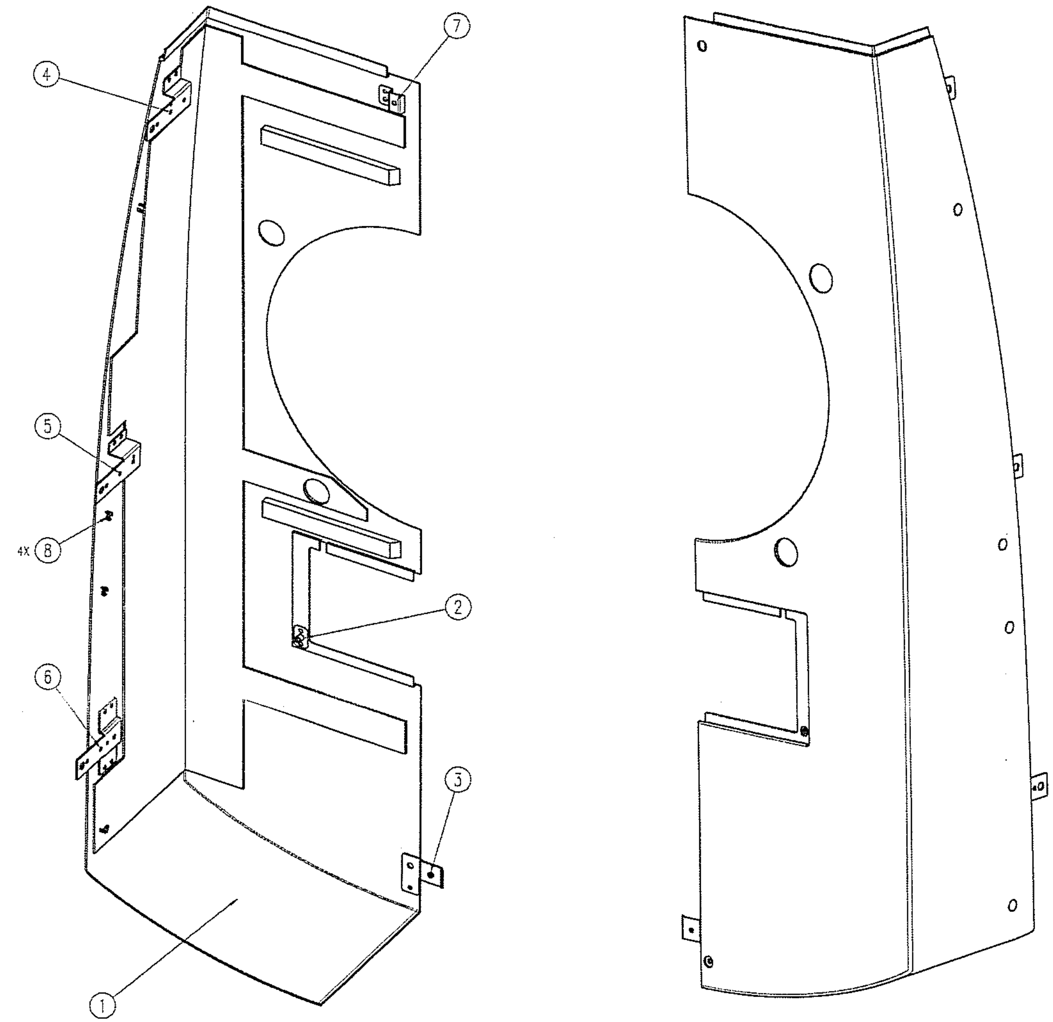

NOTES:

1. FIBERGLASS RESIN SYSTEM SHALL BE CERTIFIED TO MEET UL94 VO.
2. WALL THICKNESS OF OPEN MOLDED FIBERGLASS PARTS TO BE .13-.19" [3.3-4.8 mm].
3. RADII OF FIBERGLASS PARTS TO BE .13-.19" [3.3-4.8 mm] EXCEPT AS NOTED.
4. TOLERANCE FOR OPEN MOLDED FIBERGLASS PARTS, UNLESS OTHERWISE NOTED:

   TRIM SURFACE ±.04"
   FROM DATUM TO STARTING BRACKET OF BRACKET PATTERN ±.04"
   FROM DATUM TO STARTING HOLE OF HOLE PATTERN ±.04"
   BRACKET TO BRACKET LOCATION ±.02"
   HOLE TO HOLE LOCATION ±.02"
   HOLE DIAMETER 0 TO .433 +.006" -.014" [11.00 mm]
   HOLE DIAMETER OVER .433 +.035" -.045" [11.00 mm]
5. PROVIDE PROTECTIVE CONTAINER AND IDENTIFY IT WITH PART NO. AND APPLICABLE REVISION LEVEL.

$\boxed{6}$ PART SHALL BE PERMANENTLY MARKED WITH THE DRAWING NUMBER AND REVISION LEVEL OF INDIVIDUAL PART DRAWING APPROXIMATELY WHERE SHOWN.

7. COREMAT AND BALSA WOOD REFERENCE DIMENSIONS SHOULD BE USED TO AID IN PLACEMENT AND CUT-OUT PATTERNS. REINFORCEMENT SHALL NOT INTERFERE WITH BRACKET POSITIONS OR TRIM EDGES.
8. DIMENSIONAL LIMITS APPLY AFTER PLATING (OR OTHER FINISH).
9. PROTECT THREADS FROM DAMAGE AND ASSURE THAT THEY REMAIN FREE OF DEBRIS.
10. COLOR MATCH TO SIEMENS MEDIUM BASIC 701 WITH MICROTEXTURE (FEINSTRUKTURE 4).
11. ATTACH BRACKETS WITH EPOXY THEN COVER WITH FIBERGLASS.

edges of undefined shape: ISO 13715

Rz63

$^{+0.3}_{-0.1}$ $^{+0.3}_{+0.1}$

Mod.-No.	Name	Date
–	–	–
–	–	–
–	–	–
–	–	–
–	–	–
–	–	–
		04.12.06

Modification History

UNLESS OTHERWISE SPECIFIED

☐ ELECTRICAL DWG PER ANSI Y32.2
☒ MECHANICAL DWG PER ANSI Y14.5
☐ WELD SYMBOLS PER ANSI A2.4
☐ SCREW THREAD PER ANSI Y14.6
☒ LEADING DIMENSIONS IN INCHES
☐ BREAK ALL SHARP EDGES .015 MAX.
MAX. ALL MACHINED SURFACES PER ANSI B46.1

DECIMALS
.X ± --
.XX ± --
.XXX ± --

ANGLES
±---°

ITEM	QTY	PART OR IDENTIFYING NUMBER	NOMENCLATURE OR DESCRIPTION
8	4	62PP0680G10	PLUG_ACCES_HOLE_PLUG
7	1	10266225	BRACKET_A_BACK
6	1	10266210	BRACKET_C_REAR_PANEL
5	1	10266209	BRACKET_B_BACK_PANEL
4	1	10266208	BRACKET_A_REAR_PANEL
3	1	10266224	BRACKET_BACK_PANEL
2	1	10266223	SHEETMETAL_REAR_ACCES
1	1	5859108W001	COVER_LEFT REAR - FIBERGLASS REINFORCED POLYESTER

Material —
Part-No. —
Surface —
Surface-No. —
Surface in mm² —
General Tolerance ~~ISO 2768-mK~~
Tolerance ~~ISO 8015~~
Surface ~~ISO 1302~~
Dimensions to be checked at approval

Dept./Name		Date/Signature
Author	D. NOSAL	
Checked	see SAP/EDM	
Approval	see SAP/EDM	

Modification No. --

[redacted]

COVER_LEFT_REAR

Part-No. | Doc-Type | Index | Rev. | Type-No.
5859108EZG-01P- A -S050U

Scale 1:5
Drawing State Draft
• I-DEAS •
A1

First application
xxxxxxx
xxxxx

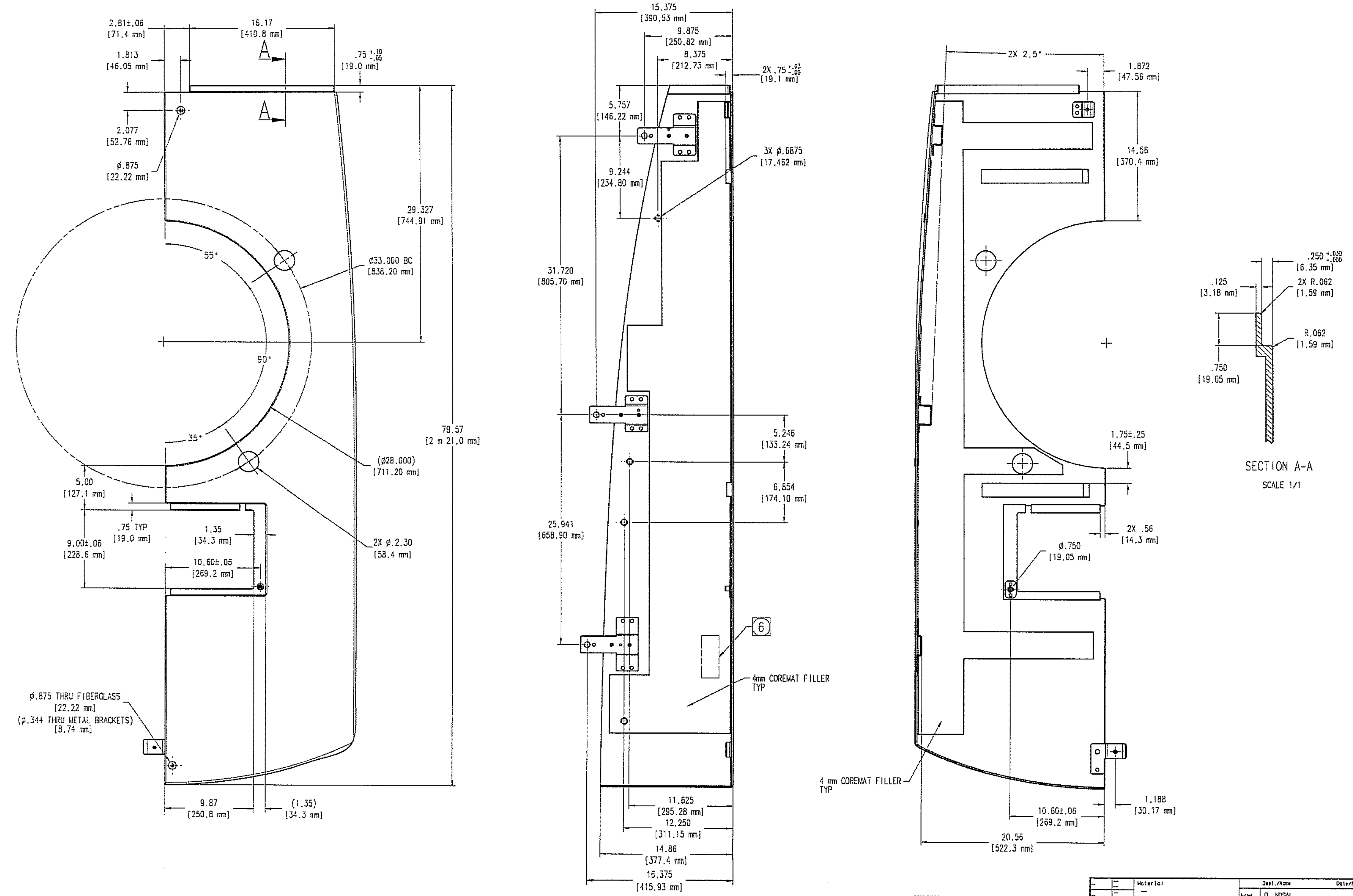
2.81±.06
[71.4 mm]
16.17
[410.8 mm]
A
A
.75 +.10 -.05
[19.0 mm]
1.813
[46.05 mm]
2.077
[52.76 mm]
ø.875
[22.22 mm]
29.327
[744.91 mm]
55°
ø33.000 BC
[838.20 mm]
90°
35°
79.57
[2 m 21.0 mm]
(ø28.000)
[711.20 mm]
5.00
[127.1 mm]
.75 TYP
[19.0 mm]
1.35
[34.3 mm]
9.00±.06
[228.6 mm]
2X ø.2.30
[58.4 mm]
10.60±.06
[269.2 mm]
ø.875 THRU FIBERGLASS
[22.22 mm]
(ø.344 THRU METAL BRACKETS)
[8.74 mm]
9.87
[250.8 mm]
(1.35)
[34.3 mm]
15.375
[390.53 mm]
9.875
[250.82 mm]
8.375
[212.73 mm]
2X .75 +.03 -.00
[19.1 mm]
5.757
[146.22 mm]
3X ø.6875
[17.462 mm]
9.244
[234.80 mm]
31.720
[805.70 mm]
5.246
[133.24 mm]
6.854
[174.10 mm]
25.941
[658.90 mm]
6
4mm COREMAT FILLER
TYP
11.625
[295.28 mm]
12.250
[311.15 mm]
14.86
[377.4 mm]
16.375
[415.93 mm]
2X 2.5°
1.872
[47.56 mm]
14.58
[370.4 mm]
1.75±.25
[44.5 mm]
2X .56
[14.3 mm]
ø.750
[19.05 mm]
4 mm COREMAT FILLER
TYP
1.188
[30.17 mm]
10.60±.06
[269.2 mm]
20.56
[522.3 mm]
.250 +.030 -.000
[6.35 mm]
.125
[3.18 mm]
2X R.062
[1.59 mm]
R.062
[1.59 mm]
.750
[19.05 mm]

SECTION A-A
SCALE 1/1

edges of undefined shape: ISO 13715

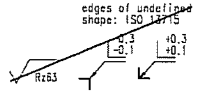
+0.3
-0.1
+0.3
+0.1
Rz63

Mod.-No.	Name	Date
--	-	-
--	-	-
--	--	-
-	-	-
-	--	--
-	-	-
		04.12.06

Modification History

UNLESS OTHERWISE SPECIFIED

- ☐ ELECTRICAL DWG PER ANSI Y32.2
- ☒ MECHANICAL DWG PER ANSI Y14.5
- ☐ WELD SYMBOLS PER ANSI A2.4
- ☐ SCREW THREAD PER ANSI Y14.6
- ☒ LEADING DIMENSIONS IN INCHES
- ☐ BREAK ALL SHARP EDGES .015 MAX.
- MAX. ALL MACHINED SURFACES PER ANSI B46.1

DECIMALS
.X ± --
.XX ± --
.XXX ± --
ANGLES
±---°

Material —
—
Part-No. —
Surface —
Surface-No. —
Surface in m² —
General Tolerance ~~ISO 2768 mK~~
Tolerance ~~ISO 8015~~
Surface ~~ISO 1302~~
Dimensions to be checked at approval

[redacted]
Medical Solutions

	Dept./Name	Date/Signature
Author	D. NOSAL	
Checked	see SAP/EDM	
Approval	see SAP/EDM	

Modification No. --

COVER_LEFT_REAR

Part-No.	Doc-Type	Index	Rev.	Type-No.
5859108	EZG-02P-	A	-	S050U

Scale 1:5
Drawing State Draft
- I-DEAS -
A1

First application
[illegible]

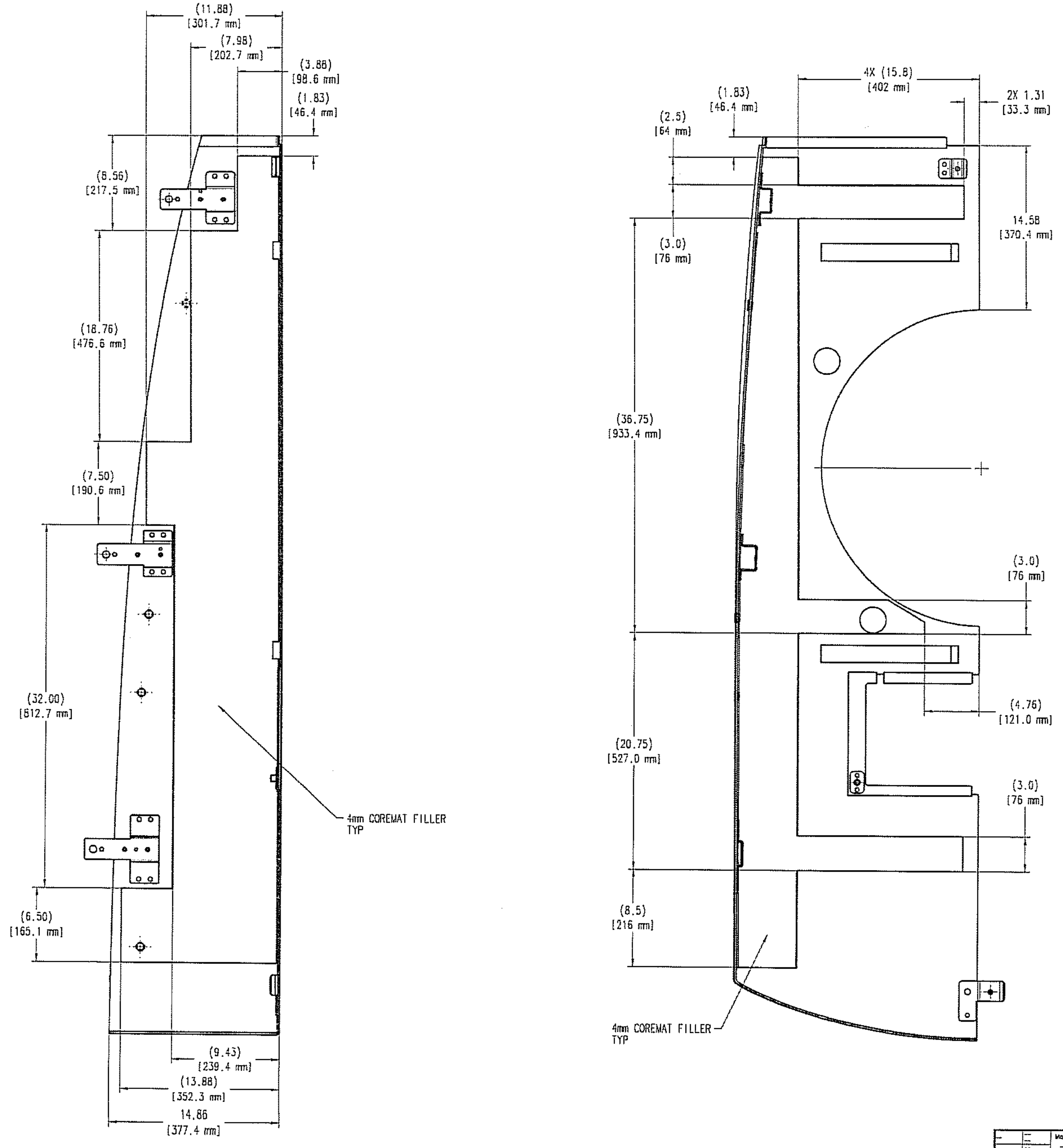
(11.88)
[301.7 mm]
(7.98)
[202.7 mm]
(3.88)
[98.6 mm]
(1.83)
[46.4 mm]
(8.56)
[217.5 mm]
(18.76)
[476.6 mm]
(7.50)
[190.6 mm]
(32.00)
[812.7 mm]
(6.50)
[165.1 mm]
4mm COREMAT FILLER
TYP
(9.43)
[239.4 mm]
(13.88)
[352.3 mm]
14.86
[377.4 mm]
4X (15.8)
[402 mm]
(1.83)
[46.4 mm]
2X 1.31
[33.3 mm]
(2.5)
[64 mm]
14.58
[370.4 mm]
(3.0)
[76 mm]
(36.75)
[933.4 mm]
(3.0)
[76 mm]
(4.76)
[121.0 mm]
(20.75)
[527.0 mm]
(3.0)
[76 mm]
(8.5)
[216 mm]
4mm COREMAT FILLER
TYP

edges of undefined shape: ISO 13715
-0.3 / -0.1
+0.3 / +0.1
Rz63

—	—	—
—	—	—
—	—	—
—	—	—
—	—	—
—	—	—
		05.12.06
Mod.-No.	Name	Date

Modification History

UNLESS OTHERWISE SPECIFIED

☐ ELECTRICAL DWG PER ANSI Y32.2
☒ MECHANICAL DWG PER ANSI Y14.5
☐ WELD SYMBOLS PER ANSI A2.4
☐ SCREW THREAD PER ANSI Y14.6
☒ LEADING DIMENSIONS IN INCHES
☐ BREAK ALL SHARP EDGES .015 MAX.
√ MAX. ALL MACHINED SURFACES PER ANSI B46.1

DECIMALS
.X ± --
.XX ± --
.XXX ± --
ANGLES
±---°

Material —
—
Part-No. —
Surface —
Surface-No. —
Surface in m² —
General Tolerance ~~ISO 2768 mK~~
Tolerance ~~ISO 8015~~
Surface ~~ISO 1302~~
Dimensions to be checked at approval

[redacted]
Medical Solutions

Dept./Name		Date/Signature
Author	D. NOSAL	
Checked	see SAP/EDM	
Approval	see SAP/EDM	

Modification No. --

COVER_LEFT_REAR

Part-No. | Doc-Type | Index | Rev. | Type-No.
5859108EZG-03M- A -S050U

Scale 1:5 | Drawing State Draft | - I-DEAS -

A1

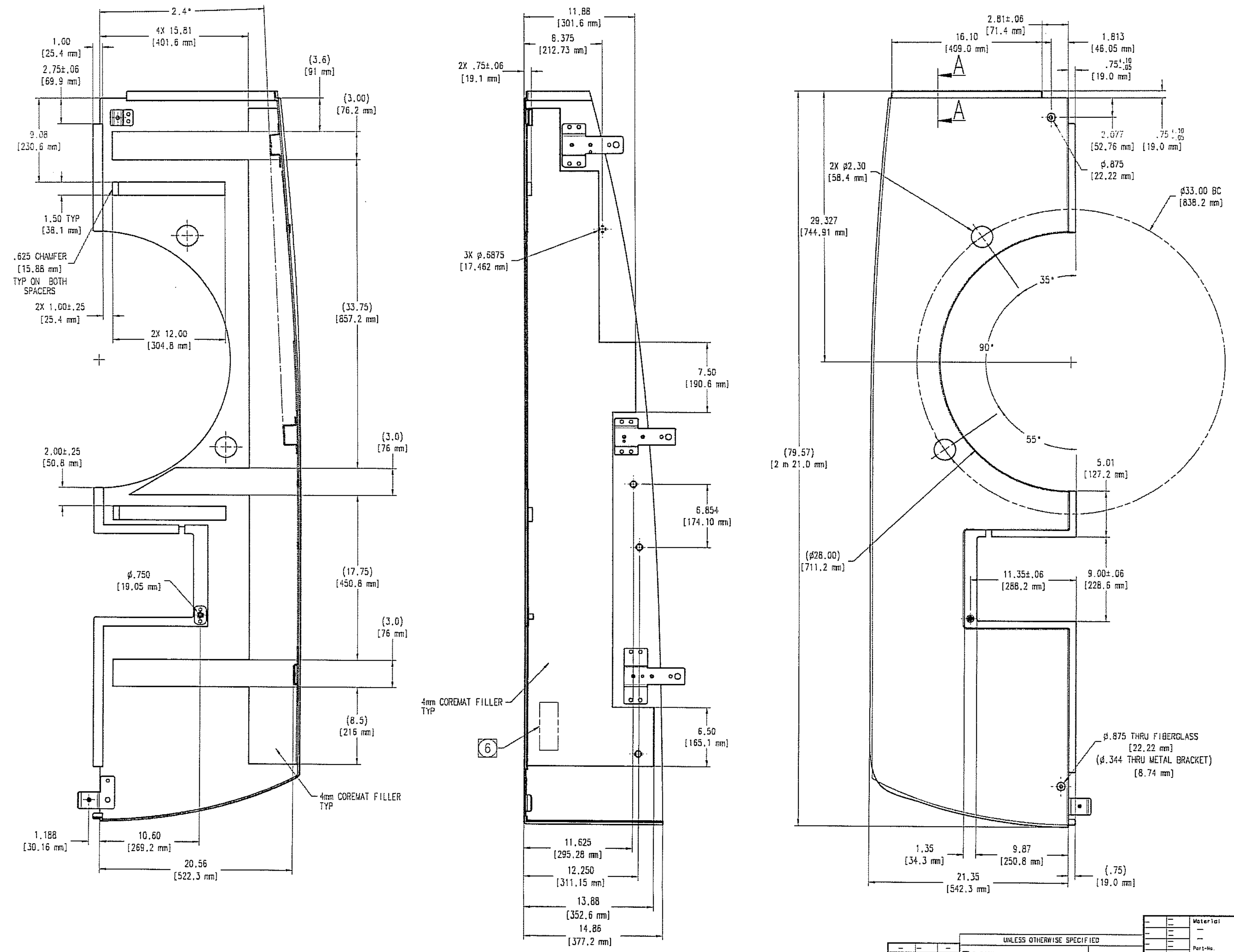
2.4°
4X 15.81 [401.6 mm]
1.00 [25.4 mm]
2.75±.06 [69.9 mm]
9.08 [230.6 mm]
1.50 TYP [38.1 mm]
.625 CHAMFER [15.88 mm] TYP ON BOTH SPACERS
2X 1.00±.25 [25.4 mm]
2X 12.00 [304.8 mm]
(3.6) [91 mm]
(3.00) [76.2 mm]
(33.75) [857.2 mm]
(3.0) [76 mm]
2.00±.25 [50.8 mm]
ø.750 [19.05 mm]
(17.75) [450.8 mm]
(3.0) [76 mm]
(8.5) [216 mm]
4mm COREMAT FILLER TYP
1.188 [30.16 mm]
10.60 [269.2 mm]
20.56 [522.3 mm]
11.88 [301.6 mm]
8.375 [212.73 mm]
2X .75±.06 [19.1 mm]
3X ø.6875 [17.462 mm]
7.50 [190.6 mm]
6.854 [174.10 mm]
6.50 [165.1 mm]
4mm COREMAT FILLER TYP
6
11.625 [295.28 mm]
12.250 [311.15 mm]
13.88 [352.6 mm]
14.86 [377.2 mm]
2.81±.06 [71.4 mm]
16.10 [409.0 mm]
1.813 [46.05 mm]
.75 +.10 -.05 [19.0 mm]
A
A
2.077 [52.76 mm]
.75 +.10 -.05 [19.0 mm]
ø.875 [22.22 mm]
2X ø2.30 [58.4 mm]
ø33.00 BC [838.2 mm]
29.327 [744.91 mm]
35°
90°
55°
(79.57) [2 m 21.0 mm]
5.01 [127.2 mm]
(ø28.00) [711.2 mm]
11.35±.06 [288.2 mm]
9.00±.06 [228.6 mm]
ø.875 THRU FIBERGLASS [22.22 mm] (ø.344 THRU METAL BRACKET) [8.74 mm]
1.35 [34.3 mm]
9.87 [250.8 mm]
21.35 [542.3 mm]
(.75) [19.0 mm]

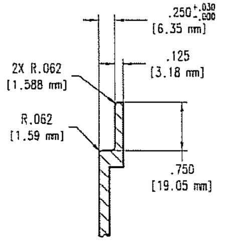
.250 +.030 -.000 [6.35 mm]
.125 [3.18 mm]
2X R.062 [1.588 mm]
R.062 [1.59 mm]
.750 [19.05 mm]

SECTION A-A
SCALE 1/1

edges of undefined shape: ISO 13715
-0.3 -0.1
+0.3 +0.1
Rz63

Mod.-No.	Name	Date
–	–	–
–	–	–
–	–	–
–	–	–
–	–	–
–	–	–
		07.12.06

Modification History

UNLESS OTHERWISE SPECIFIED

☐ ELECTRICAL DWG PER ANSI Y32.2
☒ MECHANICAL DWG PER ANSI Y14.5
☐ WELD SYMBOLS PER ANSI A2.4
☐ SCREW THREAD PER ANSI Y14.6
☒ LEADING DIMENSIONS IN INCHES
☐ BREAK ALL SHARP EDGES .015 MAX.
√ MAX. ALL MACHINED SURFACES PER ANSI B46.1

DECIMALS
.X ± --
.XX ± --
.XXX ± --
ANGLES
±---°

Material —
Part-No. —
Surface —
Surface-No. —
Surface in m² —
General Tolerance ~~ISO 2768-mK~~
Tolerance ~~ISO 8015~~
Surface ~~ISO 1302~~
Dimensions to be checked at approval

[redacted]

	Dept./Name	Date/Signature
Author	D. NOSAL	
Checked	see SAP/EDM	
Approval	see SAP/EDM	

Modification No. --

COVER_RIGHT_REAR

Part-No. | Doc-Type | Index | Rev. | Type-No.
5859116EZG-02P- A -S050U

Scale 1:5 | Drawing State Draft | • I-DEAS •

A1

Enlargement not to scale !
The reproduction, transmission or use of this document or its contents is not permitted without express written authority. Offenders will be liable for damages. All rights, including rights created by patent grant or registration of a utility model or design, are reserved.

First Application

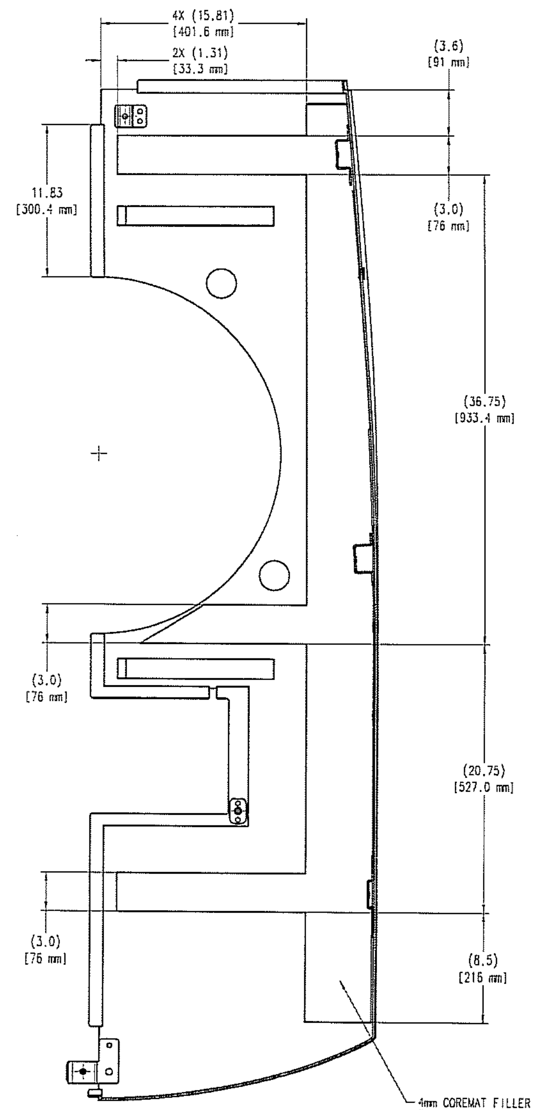
4X (15.81)
[401.6 mm]
2X (1.31)
[33.3 mm]
(3.6)
[91 mm]
11.83
[300.4 mm]
(3.0)
[76 mm]
(36.75)
[933.4 mm]
(3.0)
[76 mm]
(20.75)
[527.0 mm]
(3.0)
[76 mm]
(8.5)
[216 mm]
4mm COREMAT FILLER
TYP

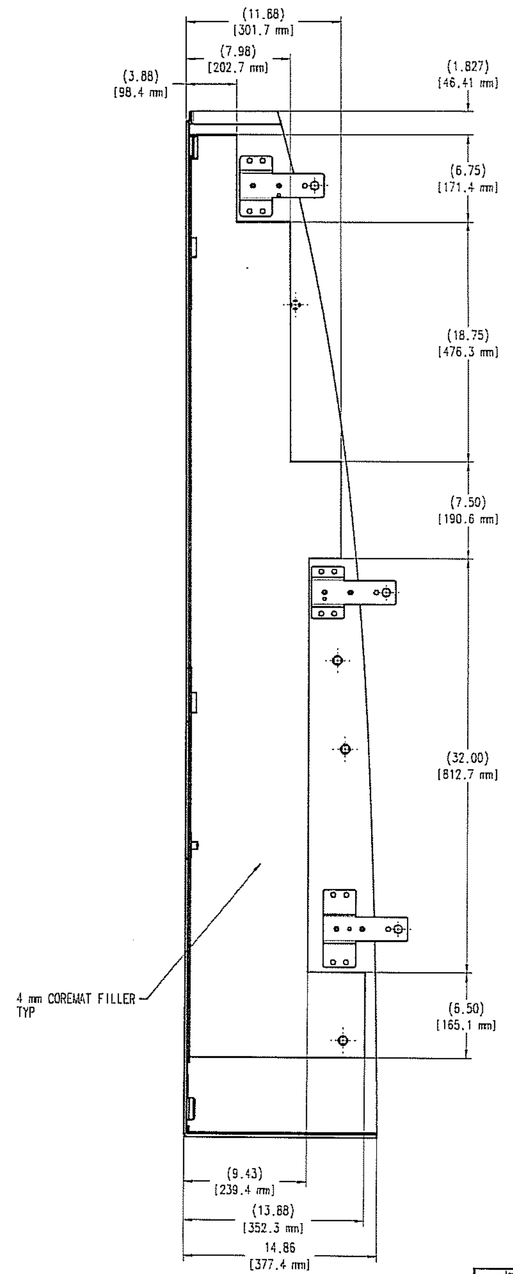
(11.88)
[301.7 mm]
(7.98)
[202.7 mm]
(3.88)
[98.4 mm]
(1.827)
[46.41 mm]
(6.75)
[171.4 mm]
(18.75)
[476.3 mm]
(7.50)
[190.6 mm]
(32.00)
[812.7 mm]
(6.50)
[165.1 mm]
4 mm COREMAT FILLER
TYP
(9.43)
[239.4 mm]
(13.88)
[352.3 mm]
14.86
[377.4 mm]

edges of undefined shape: ISO 13715

-0.3
-0.1

+0.3
+0.1

Rz63

Mod.-No.	Name	Date
–	--	–
–	--	–
--	–	–
–	--	–
–	–	–
–	–	–
		06.12.06

Modification History

UNLESS OTHERWISE SPECIFIED

- ☐ ELECTRICAL DWG PER ANSI Y32.2
- ☒ MECHANICAL DWG PER ANSI Y14.5
- ☐ WELD SYMBOLS PER ANSI A2.4
- ☐ SCREW THREAD PER ANSI Y14.6
- ☒ LEADING DIMENSIONS IN INCHES
- ☐ BREAK ALL SHARP EDGES .015 MAX.
- MAX. ALL MACHINED SURFACES PER ANSI B46.1

DECIMALS
.X ± --
.XX ± --
.XXX ± --

ANGLES
±---°

Material	—
	—
Part-No.	—
Surface	--
Surface-No.	—
Surface in m²	--
General Tolerance	~~ISO 2768-mK~~
Tolerance	~~ISO 8015~~
Surface	~~ISO 1302~~

Dimensions to be checked at approval

[redacted]

	Dept./Name	Date/Signature
Author	D. NOSAL	
Checked	see SAP/EDM	
Approval	see SAP/EDM	
Modification No.	--	

COVER_RIGHT_REAR

Part-No. (Doc-Type)	Index	Rev.	Type-No.
5859116EZG-03M-	A		-S050U

Scale	Drawing State	
1:5	Draft	• I-DEAS •

A1

First Application
xxxxxxx
xxxxx

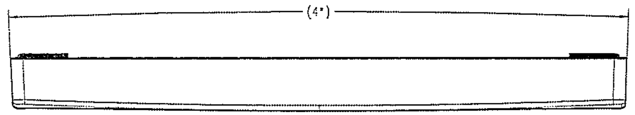

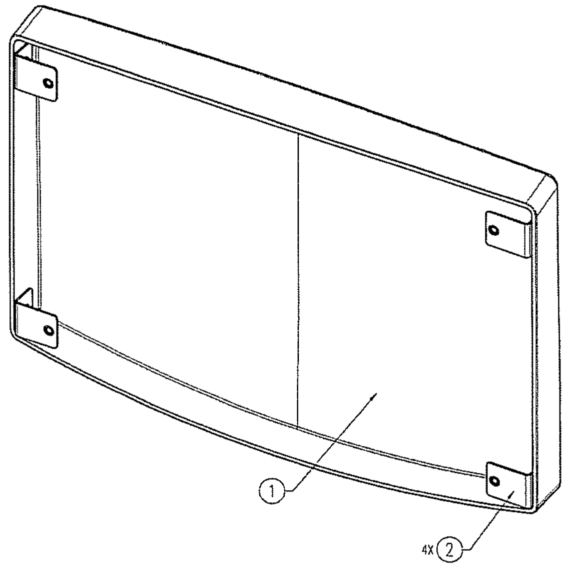

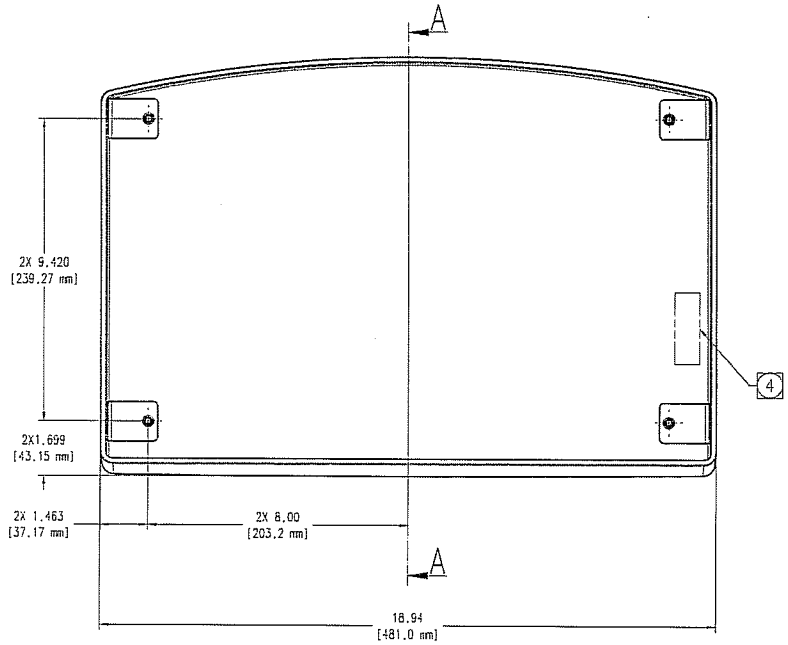

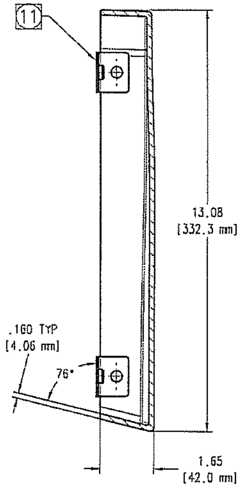

VIEW A-A

NOTES:

1. PROVIDE PROTECTIVE CONTAINER MARKED WITH DRAWING NUMBER AND REVISION LEVEL.
2. TOLERANCE FOR OPEN MOLDED FIBERGLASS PARTS, UNLESS OTHERWISE NOTED:

   TRIM SURFACE ±.04" [1.0 mm]
   FROM DATUM TO STARTING BRACKET OF BRACKET PATTERN ±.04" [1.0 mm]
   FROM DATUM TO STARTING HOLE OF HOLE PATTERN ±.04" [1.0 mm]
   BRACKET TO BRACKET LOCATION ±.02" [0.5 mm]
   HOLE TO HOLE LOCATION ±.02" [0.5 mm]
   HOLE DIAMETER 0 TO .433" [0.-11.00 mm] +.006 -.014
   HOLE DIAMETER OVER .433" [11.00-11.00+ mm] +.035 -.045

3. COLOR TO MATCH SIEMENS WHITE 610 WITH MICROTEXTURE (FIENSTRUKTURE 4).
4. PART SHALL BE PERMANENTLY MARKED WITH THE PART NUMBER AND REVISION LEVEL OF INDIVIDUAL PART DRAWING APPROXIMATELY WHERE SHOWN.
5. FIBERGLASS RESIN SYSTEM SHALL BE CERTIFIED TO MEET UL94 V0.
6. WALL THICKNESS OF OPEN MOLDED FIBERGLASS PARTS TO BE .13"-.19" [3.3-4.8 mm].
7. RADII OF FIBERGLASS PARTS TO BE .13"-.19" [3.3-4.8 mm] EXCEPT AS NOTED.
8. ATTACH BRACKETS WITH EPOXY AND THEN COVER WITH FIBERGLASS.
9. DIMENSIONAL LIMITS APPLY AFTER PLATING (OR OTHER FINISH).
10. PROTECT THREADS FROM DAMAGE AND ASSURE THAT THEY REMAIN FREE OF DEBRIS.
11. SURFACE OF THE BRACKETS ARE FLUSH WITH THE TRIM (4X).

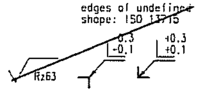

Mod.-No.	Name	Date
--	--	--
--	--	--
--	--	--
--	--	--
--	--	--
--	--	--
		02.12.05

Modification History

UNLESS OTHERWISE SPECIFIED

☐ ELECTRICAL DWG PER ANSI Y32.2
☒ MECHANICAL DWG PER ANSI Y14.5
☐ WELD SYMBOLS PER ANSI A2.4
☐ SCREW THREAD PER ANSI Y14.6
☒ LEADING DIMENSIONS IN INCHES
☐ BREAK ALL SHARP EDGES .015 MAX.
√ MAX. ALL MACHINED SURFACES PER ANSI B46.1

DECIMALS
.X ± --
.XX ± --
.XXX ± --
ANGLES
±---°

ITEM	QTY	PART OR IDENTIFYING NUMBER	NOMENCLATURE OR DESCRIPTION
2	4	10266226	COVER_COUNTERWEIGHT_NULLCOVER
1	1	5859181M001	COVER_FILLER_CTWT ONLY - FIBERGLASS REINFORCED POLYESTER

Material	--
Part-No.	--
Surface	--
Surface-No.	--
Surface in m²	--
General Tolerance	~~ISO 2768 mK~~
Tolerance	~~ISO 2768~~
Surface	~~ISO 1302~~
Dimensions to be checked at approval	

[redacted]

	Dept./Name	Date/Signature
Author	L. MACHNA	
Checked	see SAP/EDM	
Approval	see SAP/EDM	
Modification No.	--	

COVER_FILLER_CTWT_ONLY

Part-No. | Doc-Type | Index | Rev. | Type-No.
5859181EZG-01P-B1-S050U

Scale 1:2 | Drawing State Draft | • I-DEAS •

A1

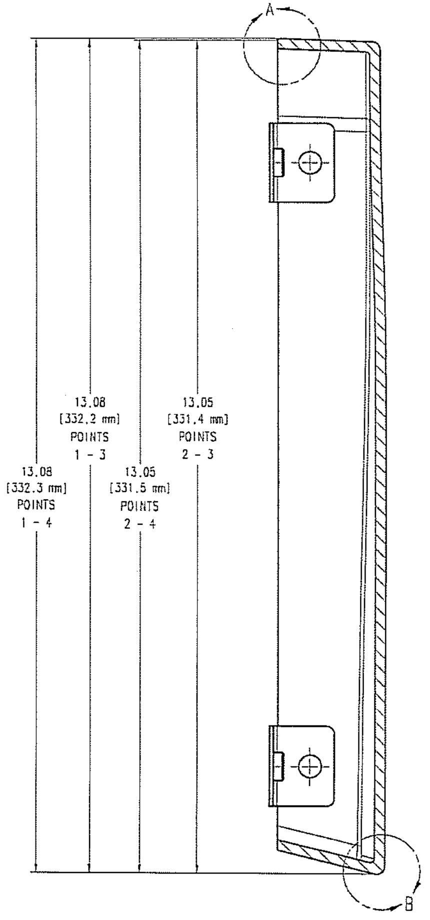
A
13.08
[332.3 mm]
POINTS
1 - 4
13.08
[332.2 mm]
POINTS
1 - 3
13.05
[331.5 mm]
POINTS
2 - 4
13.05
[331.4 mm]
POINTS
2 - 3
B

SECTION A-A

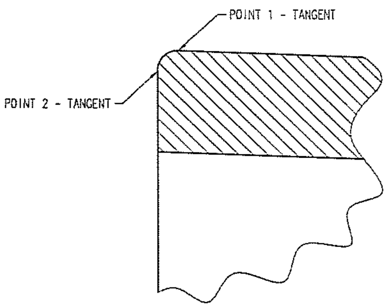
POINT 1 - TANGENT
POINT 2 - TANGENT

DETAIL A
SCALE 10/1

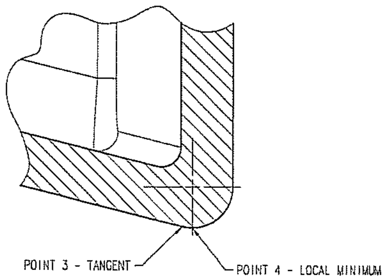
POINT 3 - TANGENT
POINT 4 - LOCAL MINIMUM

DETAIL B
SCALE 10/1

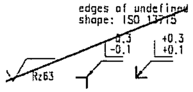
edges of undefined shape: ISO 13715
+0.3
-0.1
+0.3
+0.1
Rz63

--	--	--
--	--	--
--	--	--
--	--	--
--	--	--
--	--	--
		02.12.06
Mod.-No.	Name	Date

Modification History

UNLESS OTHERWISE SPECIFIED

☐ ELECTRICAL DWG PER ANSI Y32.2
☒ MECHANICAL DWG PER ANSI Y14.5
☐ WELD SYMBOLS PER ANSI A2.4
☐ SCREW THREAD PER ANSI Y14.6
☒ LEADING DIMENSIONS IN INCHES
☒ BREAK ALL SHARP EDGES .015 MAX.
√ MAX. ALL MACHINED SURFACES PER ANSI B46.1

DECIMALS
.X ± --
.XX ± --
.XXX ± --
ANGLES
±---°

Material --
--
Part-No. --
Surface --
Surface-No. --
Surface in dm² --
General Tolerance ~~ISO 2768 mK~~
Tolerance ~~ISO 2768~~
Surface ~~ISO 1302~~
Dimensions to be checked at approval

[redacted] Solutions

Dept./Name		Date/Signature
Author	L. NACHNA	
Checked	see SAP/EDM	
Approval	see SAP/EDM	
Modification No.	--	

COVER_FILLER_CTWT_ONLY

Part-No. | Doc-Type | Index | Rev. | Type-No.
5859181EZG-02M-B1-S050U

Scale 1:1
Drawing State Draft
• I-DEAS •
A1

First Application

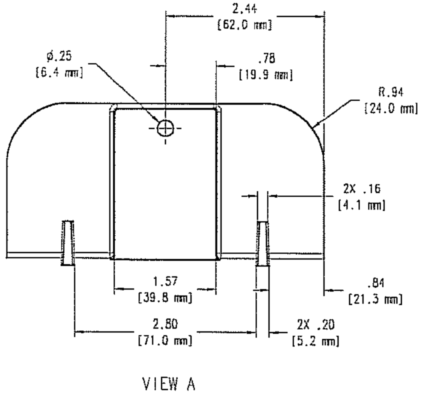
2.44
[62.0 mm]
ϕ.25
[6.4 mm]
.78
[19.9 mm]
R.94
[24.0 mm]
2X .16
[4.1 mm]
1.57
[39.8 mm]
.84
[21.3 mm]
2.80
[71.0 mm]
2X .20
[5.2 mm]
VIEW A

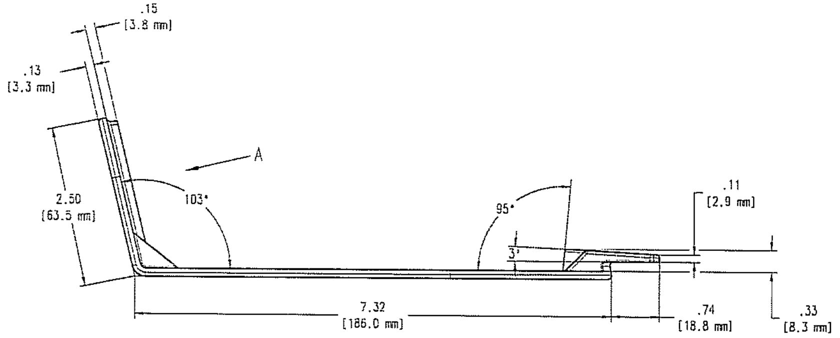
.15
[3.8 mm]
.13
[3.3 mm]
A
2.50
[63.5 mm]
103°
95°
3°
.11
[2.9 mm]
7.32
[186.0 mm]
.74
[18.8 mm]
.33
[8.3 mm]

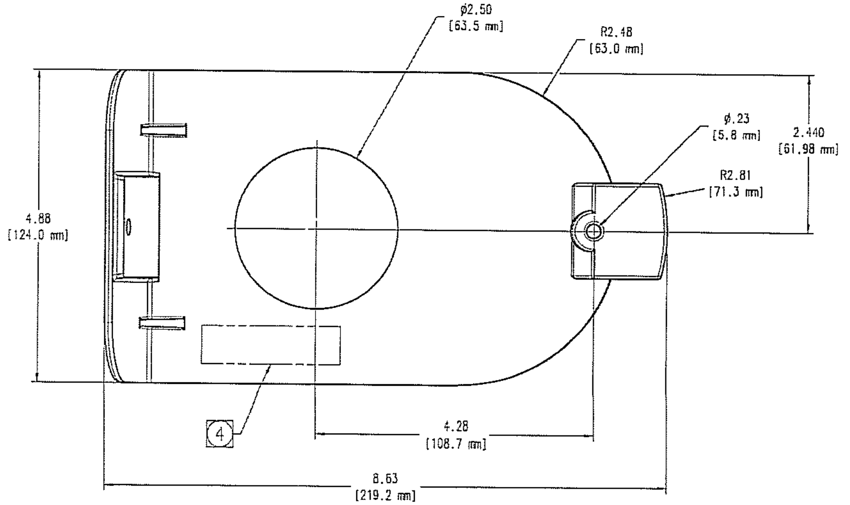
ϕ2.50
[63.5 mm]
R2.48
[63.0 mm]
ϕ.23
[5.8 mm]
2.440
[61.98 mm]
R2.81
[71.3 mm]
4.88
[124.0 mm]
4
4.28
[108.7 mm]
8.63
[219.2 mm]

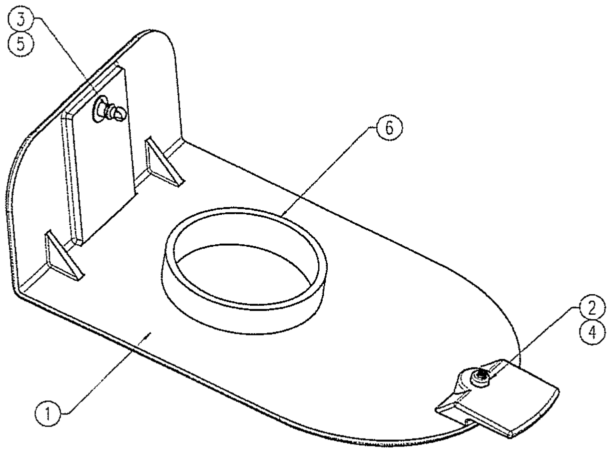

NOTES:

1. PROVIDE PROTECTIVE CONTAINER MARKED WITH DRAWING NUMBER AND REVISION LEVEL.
2. TOLERANCE FOR OPEN MOLDED FIBERGLASS PARTS, UNLESS OTHERWISE NOTED:

   TRIM SURFACE ±.04" [1.0 mm]
   FROM DATUM TO STARTING BRACKET OF BRACKET PATTERN ±.04" [1.0 mm]
   FROM DATUM TO STARTING HOLE OF HOLE PATTERN ±.04" [1.0 mm]
   BRACKET TO BRACKET LOCATION ±.02" [0.5 mm]
   HOLE TO HOLE LOCATION ±.02" [0.5 mm]
   HOLE DIAMETER 0 TO .433 [0.-11.00 mm] +.006" -.014"
   HOLE DIAMETER OVER .433 [11.00-11.00+ mm] +.035" -.045"

3. COLOR MATCH TO SIEMENS WHITE 610 WITH MICROTEXTURE (FEINSTRUKTURE 4).

4 PART SHALL BE PERMANENTLY MARKED WITH THE PART NUMBER AND REVISION LEVEL OF INDIVIDUAL PART DRAWING APPROXIMATELY WHERE SHOWN.

ITEM	QTY	PART OR IDENTIFYING NUMBER	NOMENCLATURE OR DESCRIPTION
6	1	85985K35	MCMASTER-CAR_HOLE PLUG
5	1	82-19-400-16	QUARTER TURN OVAL PHL_SOUTHCO
4	1	91303A039	M4-8_HD CUP SCREW_SOC STEEL_MCMASTER
3	1	82-32-301-12	WASHER_SOUTHCO_20301A
2	1	94180A353	M4-7X7_9ML_BRASS THREADED INSERT_MCMASTER
1	1	7349702M001	BACKPOINTER ACCES DOOR

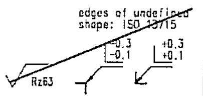
edges of undefined shape: ISO 13715
-0.3
-0.1
+0.3
+0.1
Rz63

Mod.-No.	Name	Date
--	--	--
--	--	--
--	--	--
--	--	--
--	--	--
--	--	--
		07.12.06

Modification History

UNLESS OTHERWISE SPECIFIED

☐ ELECTRICAL DWG PER ANSI Y32.2
☒ MECHANICAL DWG PER ANSI Y14.5
☐ WELD SYMBOLS PER ANSI A2.4
☐ SCREW THREAD PER ANSI Y14.6
☒ LEADING DIMENSIONS IN INCHES
☐ BREAK ALL SHARP EDGES .015 MAX.
√ MAX. ALL MACHINED SURFACES PER ANSI B46.1

DECIMALS
.X ± --
.XX ± --
.XXX ± --

ANGLES
±---°

Material —
—
Part-No. --
Surface --
Surface-No. --
Surface in m² --
General Tolerance ~~ISO 2768 mK~~
Tolerance ~~ISO 2013~~
Surface ~~ISO 1302~~
Dimensions to be checked at approval

Dept./Name		Date/Signature
Author	L. MACHNA	
Checked	see SAP/EDM	
Approval	see SAP/EDM	

Modification No. ---

[redacted]

BACKPOINTER_ACCESS_DOOR_7

Part-No. | Doc-Type | Index | Rev. | Type-No.
7349702EZG-01M- A -S050U

Scale 1:1 | Drawing State Draft | • I-DEAS •

A1

First Application

NOTES:

1. FIBERGLASS RESIN SYSTEM SHALL BE CERTIFIED TO MEET UL94 VO.
2. WALL THICKNESS OF OPEN MOLDED FIBERGLASS PARTS TO BE .13"-.19" [3.3-4.8 mm].
3. RADII OF FIBERGLASS PARTS TO BE .13"-.19" [3.3-4.8 mm] EXCEPT AS NOTED.
4. TOLERANCE FOR OPEN MOLDED FIBERGLASS PARTS, UNLESS OTHERWISE NOTED:

   TRIM SURFACE ±.04" [1.0 mm]
   FROM DATUM TO STARTING BRACKET OF BRACKET PATTERN ±.04" [1.0 mm]
   FROM DATUM TO STARTING HOLE OF HOLE PATTERN ±.04" [1.0 mm]
   BRACKET TO BRACKET LOCATION ±.02" [0.5 mm]
   HOLE TO HOLE LOCATION ±.02" [0.5 mm]
   HOLE DIAMETER 0 TO .433" [0.-11.00 mm] +.006" -.014"
   HOLE DIAMETER OVER .433" [11.00-11.00+ mm] +.035" -.045"

5. PROVIDE PROTECTIVE CONTAINER MARKED WITH DRAWING NUMBER AND REVISION LEVEL.

$\boxed{6}$ PART SHALL BE PERMANENTLY MARKED WITH THE PART NUMBER AND REVISION LEVEL OF INDIVIDUAL PART DRAWING APPROXIMATELY WHERE SHOWN.

7. COREMAT AND BALSA WOOD REFERENCE DIMENSIONS SHOULD BE USED TO AID IN PLACEMENT AND CUT-OUT PATTERNS. REINFORCEMENT SHALL NOT INTERFER WITH BRACKET POSITIONS OR TRIM EDGES.
8. DIMENSIONAL LIMITS APPLY AFTER PLATING (OR OTHER FINISH).
9. PROTECT THREADS FROM DAMAGE AND ASSURE THAT THEY REMAIN FREE OF DEBRIS.
10. COLOR MATCH TO SIEMENS WHITE 610 WITH MICROTEXTURE (FEINSTRUKTURE 4).
11. ATTACH BRACKETS WITH EPOXY AND THEN COVER WITH FIBERGLASS.

$\boxed{12}$ TORQUE TO 156 LBf IN [18Nm].

$\boxed{13}$ COMMENT: SLOTS FIT TABS ON 5859199

$\boxed{14}$ BOND EYE OF LANYARD APPROX WHERE SHOWN

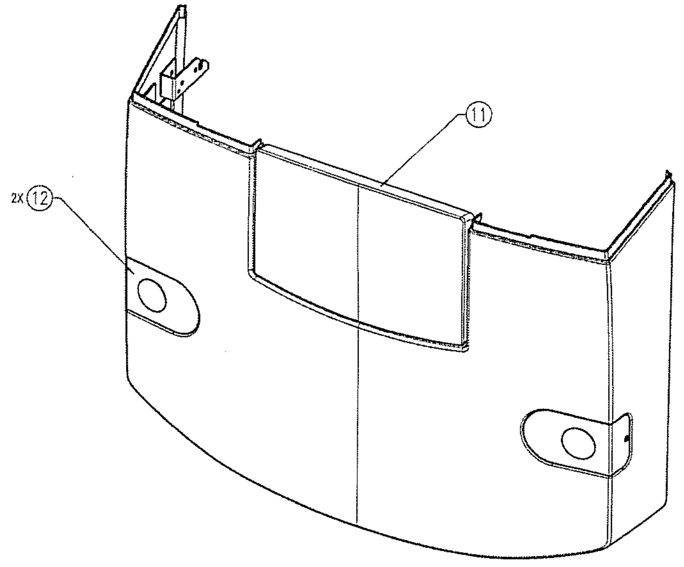

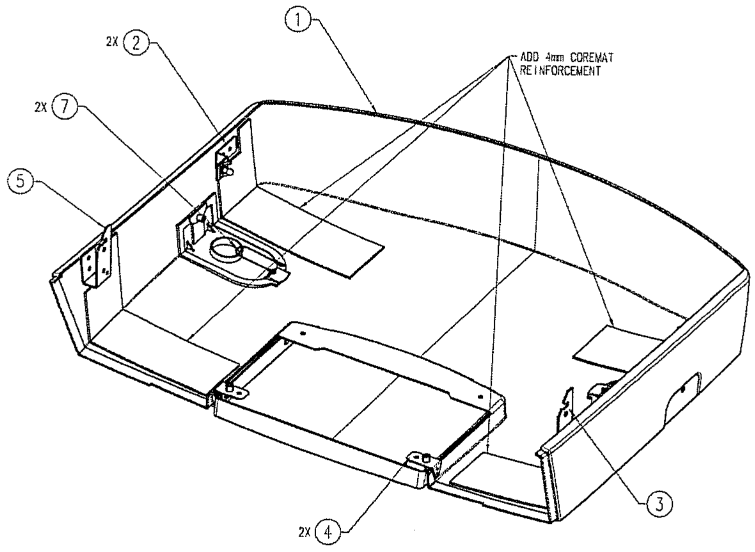

ITEM	QTY	PART OR IDENTIFYING NUMBER	NOMENCLATURE OR DESCRIPTION
12	2	7349702	BACKPOINTER_ACCESS_DOOR_7
11	1	5859181	COVER_FILLER_CTWT_ONLY
10	2	9712K65	DISK SPRING_BELLEVILLE_3171D_6250D_022THK_MCMASTER
9	2	10266205	CLIP_SPRING_401_020THK
8	2	9512K83	BALL STUD_5/16-18_13MM
7	2	90312A11	LANYARD_F13_64IN_NYLON COATED_MCMASTER
6	2	10266204	PLATE_RECEPTACLE
5	1	10266203	BRACKET_A_LEFT_CTWT_PERP
4	2	10266202	BRACKET_FILLER
3	1	10266201	BRACKET_A_CTWT_PERP
2	2	10266200	BRACKET_CTWT PIN
1	1	5859082M001	COVER_COUNTERWEIGHT

edges of undefined shape: ISO 13715
Rz63
-0.3 / -0.1
+0.3 / +0.1

Mod.-No.	Name	Date
–	–	–
–	–	–
–	–	–
–	–	–
–	–	–
–	–	–
		05.12.05

Modification History

UNLESS OTHERWISE SPECIFIED

☐ ELECTRICAL DWG PER ANSI Y32.2
☒ MECHANICAL DWG PER ANSI Y14.5
☐ WELD SYMBOLS PER ANSI A2.4
☐ SCREW THREAD PER ANSI Y14.6
☒ LEADING DIMENSIONS IN INCHES
☐ BREAK ALL SHARP EDGES .015 MAX.
√ MAX. ALL MACHINED SURFACES PER ANSI B46.1

DECIMALS
.X ± --
.XX ± --
.XXX ± --
ANGLES
±--°

Material —
Part-No. —
Surface —
Surface-No. —
Surface in m^2 —
General Tolerance ~~ISO 2768-mK~~
Tolerance ~~ISO 8015~~
Surface ~~ISO 1302~~
Dimensions to be checked at approval

[redacted]

Dept./Name		Date/Signature
Author	L. NACHNA	
Checked	see SAP/EDM	
Approval	see SAP/EDM	
Modification No.	--	

COVER_COUNTERWEIGHT

Part-No. | Doc-Type | Index | Rev. | Type-No.
5859082EZG-01P- B -S050U

Scale 1:5
Drawing State Draft
- I-DEAS -
A1

First Application

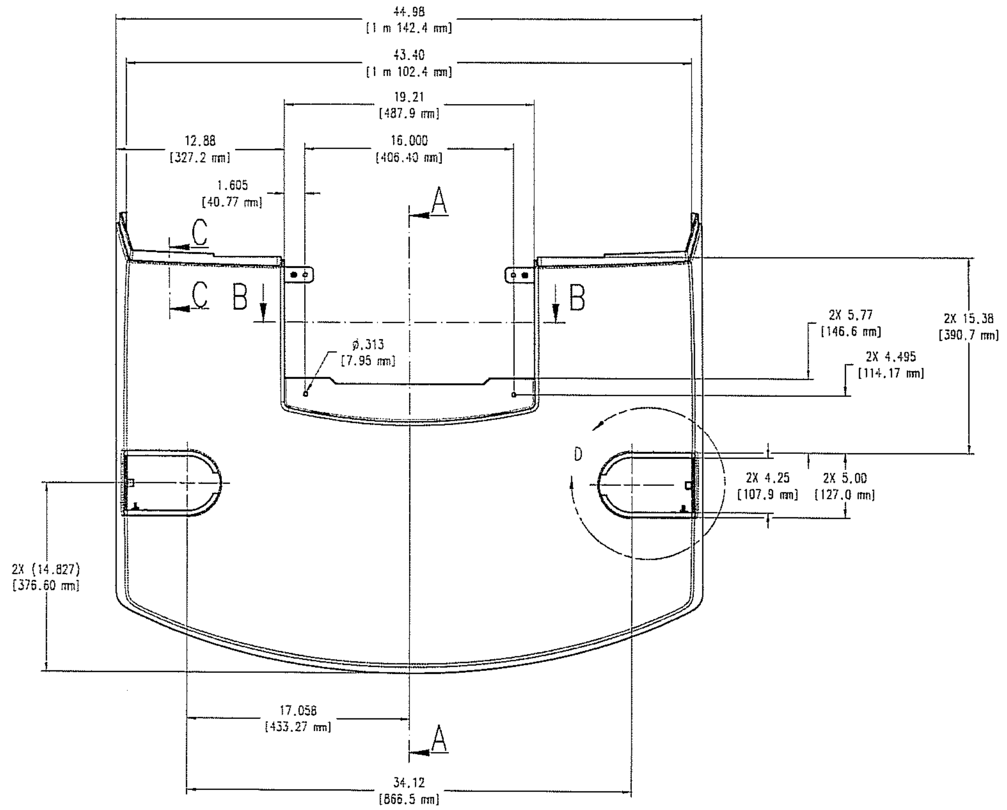
44.98
[1 m 142.4 mm]
43.40
[1 m 102.4 mm]
19.21
[487.9 mm]
16.000
[406.40 mm]
12.88
[327.2 mm]
1.605
[40.77 mm]
A
C
C
B
B
ø.313
[7.95 mm]
2X 5.77
[146.6 mm]
2X 4.495
[114.17 mm]
2X 15.38
[390.7 mm]
D
2X 4.25
[107.9 mm]
2X 5.00
[127.0 mm]
2X (14.827)
[376.60 mm]
17.058
[433.27 mm]
A
34.12
[866.5 mm]

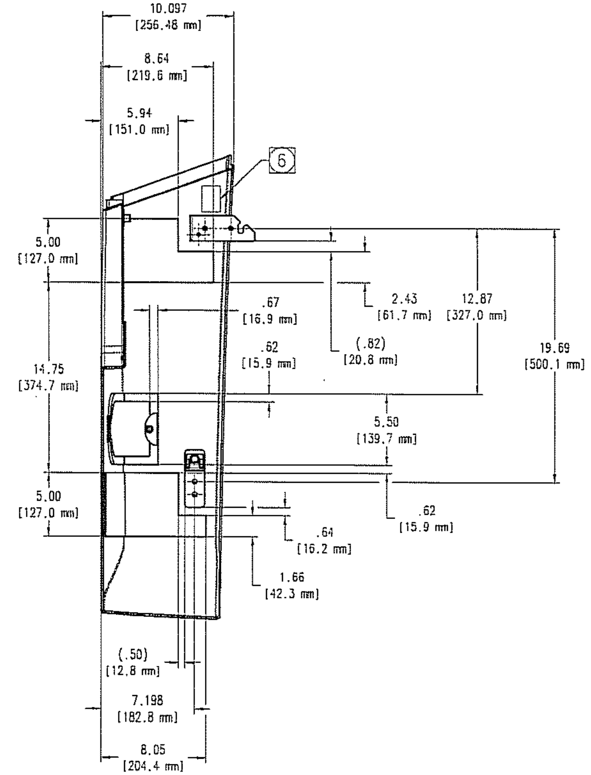
10.097
[256.48 mm]
8.64
[219.6 mm]
5.94
[151.0 mm]
6
5.00
[127.0 mm]
2.43
[61.7 mm]
12.87
[327.0 mm]
.67
[16.9 mm]
(.82)
[20.8 mm]
19.69
[500.1 mm]
.62
[15.9 mm]
14.75
[374.7 mm]
5.50
[139.7 mm]
5.00
[127.0 mm]
.62
[15.9 mm]
.64
[16.2 mm]
1.66
[42.3 mm]
(.50)
[12.8 mm]
7.198
[182.8 mm]
8.05
[204.4 mm]

SECTION A-A

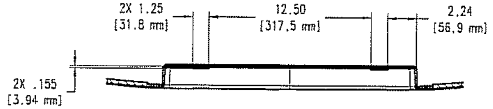
2X 1.25
[31.8 mm]
12.50
[317.5 mm]
2.24
[56.9 mm]
2X .155
[3.94 mm]

SECTION B-B

13

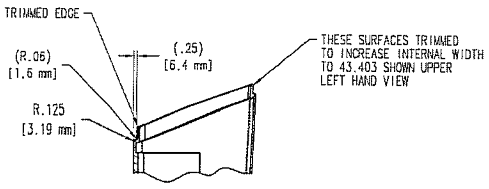
TRIMMED EDGE
(.25)
[6.4 mm]
(R.06)
[1.6 mm]
R.125
[3.19 mm]

THESE SURFACES TRIMMED TO INCREASE INTERNAL WIDTH TO 43.403 SHOWN UPPER LEFT HAND VIEW

SECTION C-C

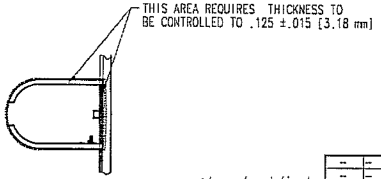

THIS AREA REQUIRES THICKNESS TO BE CONTROLLED TO .125 ±.015 [3.18 mm]

DETAIL D

edges of undefined shape: ISO 13715

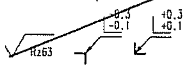
Rz63
-0.3
-0.1
+0.3
+0.1

--	--	--
--	--	--
--	--	--
--	--	--
--	--	--
--	--	--
		05.12.06
Mod.-No.	Name	Date

Modification History

UNLESS OTHERWISE SPECIFIED

☐ ELECTRICAL DWG PER ANSI Y32.2
☒ MECHANICAL DWG PER ANSI Y14.5
☐ WELD SYMBOLS PER ANSI A2.4
☐ SCREW THREAD PER ANSI Y14.6
☒ LEADING DIMENSIONS IN INCHES
☐ BREAK ALL SHARP EDGES .015 MAX.
√ MAX. ALL MACHINED SURFACES PER ANSI B46.1

DECIMALS
.X ± --
.XX ± --
.XXX ± --
ANGLES
±--°

Material —
Part-No. --
Surface —
Surface-No. --
Surface in dm² --
General Tolerance ~~ISO 2768-mK~~
Tolerance ~~ISO 8015~~
Surface ~~ISO 1302~~
Dimensions to be checked at approval

Dept./Name		Date/Signature
Author	L. MACHNA	
Checked	see SAP/EDM	
Approval	see SAP/EDM	

Modification No. --

COVER_COUNTERWEIGHT

SIEMENS

Part-No. | Doc-Type | Index | Rev. | Type-No.
5859082EZG-02P- B -S050U

Scale 1:5 | Drawing State Draft | • I-DEAS •

A1

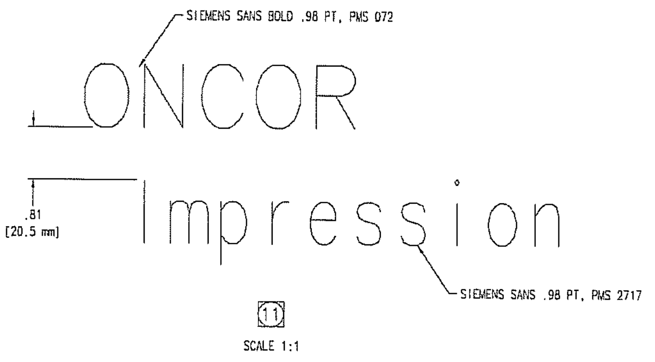
SIEMENS SANS BOLD .98 PT, PMS 072
ONCOR
.81
[20.5 mm]
Impression
SIEMENS SANS .98 PT, PMS 2717
11
SCALE 1:1

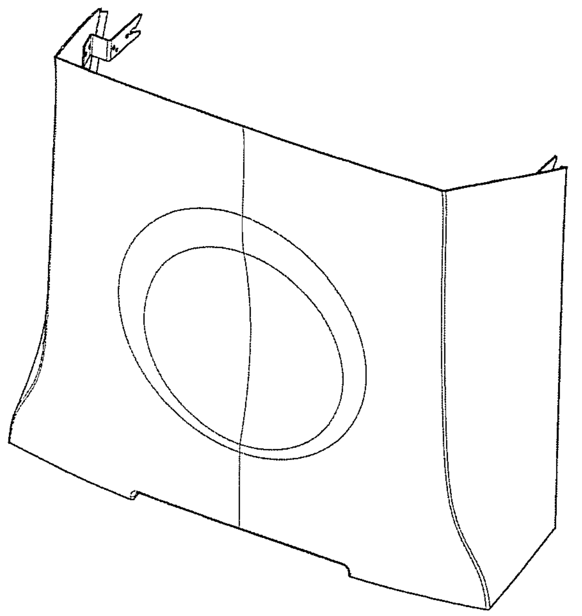

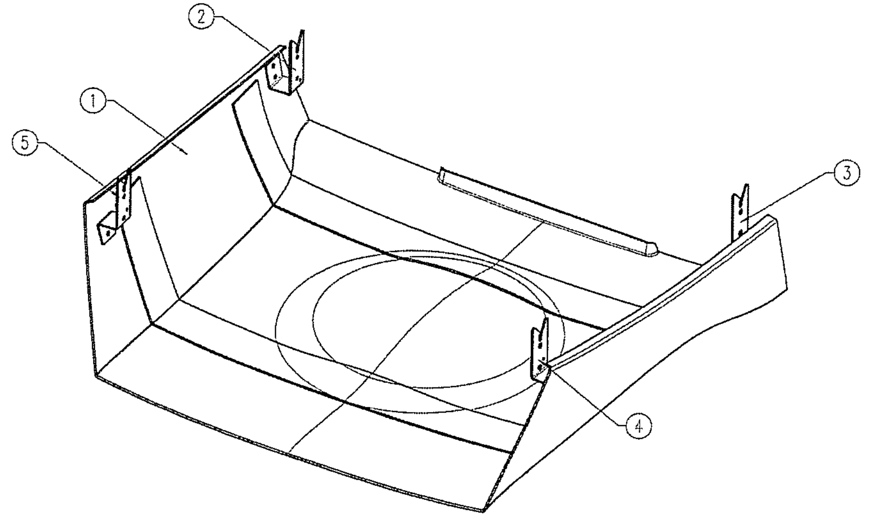

NOTES:

1. FIBERGLASS RESIN SYSTEM SHALL BE CERTIFIED TO MEET UL94 VO.
2. WALL THICKNESS OF OPEN MOLDED FIBERGLASS PARTS TO BE .13"-.19" [3.3-4.8 mm].
3. RADII OF FIBERGLASS PARTS TO BE .13"-.19" [3.3-4.8 mm] EXCEPT AS NOTED.
4. TOLERANCE FOR OPEN MOLDED FIBERGLASS PARTS, UNLESS OTHERWISE NOTED:

   TRIM SURFACE ±.04" [1.0 mm]
   FROM DATUM TO STARTING BRACKET OF BRACKET PATTERN ±.04" [1.0 mm]
   FROM DATUM TO STARTING HOLE OF HOLE PATTERN ±.04" [1.0 mm]
   BRACKET TO BRACKET LOCATION ±.02" [0.5 mm]
   HOLE TO HOLE LOCATION ±.02" [0.5 mm]
   HOLE DIAMETER 0 TO .433" [0.-11.00 mm] +.006" -.014"
   HOLE DIAMETER OVER .433" [11.00-11.00+ mm] +.035" -.045"

5. PROVIDE PROTECTIVE CONTAINER MARKED WITH DRAWING NUMBER AND REVISION LEVEL.
6. COREMAT AND BALSA WOOD REFERENCE DIMENSIONS SHOULD BE USED TO AID IN PLACEMENT AND CUT-OUT PATTERNS. REINFORCEMENT SHALL NOT INTERFER WITH BRACKET POSITIONS OR TRIM EDGES.
7. DIMENSIONAL LIMITS APPLY AFTER PLATING (OR OTHER FINISH).
8. PROTECT THREADS FROM DAMAGE AND ASSURE THAT THEY REMAIN FREE OF DEBRIS.
9. COLOR MATCH TO SIEMENS WHITE 610 WITH MICROTEXTURE (FEINSTRUKTURE 4).

$\boxed{10}$ PART SHALL BE PERMANENTLY MARKED WITH THE PART NUMBER AND REVISION LEVEL OF INDIVIDUAL PART DRAWING APPROXIMATELY WHERE SHOWN.

$\boxed{11}$ USING SUPPLIED ARTWORK APPLY "ONCOR" AND "Impression" AS SHOWN.

12. ATTACH BRACKETS WITH EPOXY AND THEN COVER WITH FIBERGLASS.

edges of undefined shape: ISO 13715
Rz63
-0.3
-0.1
+0.3
+0.1

Mod.-No.	Name	Date
--	--	--
--	--	--
--	--	--
--	--	--
--	--	--
--	--	--
		02.12.06

Modification History

UNLESS OTHERWISE SPECIFIED

☐ ELECTRICAL DWG PER ANSI Y32.2
☒ MECHANICAL DWG PER ANSI Y14.5
☐ WELD SYMBOLS PER ANSI A2.4
☐ SCREW THREAD PER ANSI Y14.6
☒ LEADING DIMENSIONS IN INCHES
☐ BREAK ALL SHARP EDGES .015 MAX.
MAX. ALL MACHINED SURFACES PER ANSI B46.1

DECIMALS
.X ± --
.XX ± --
.XXX ± --

ANGLES
±---°

ITEM	QTY	PART OR IDENTIFYING NUMBER	NOMENCLATURE OR DESCRIPTION
5	1	10266240	BRACKET_A_LEFT_CENTER
4	1	10266239	BRACKET_A_CENTER
3	1	10266238	BRACKET_B_LEFT_CENTER_BRACKET
2	1	10266237	BRACKET_CENTER_BRACKET_B
1	1	5859058N001	COVER_CENTER_IM - FIBERGLASS_REINFORCED_POLYESTER

Material --
Part-No. --
Surface --
Surface-No. --
Surface in m^2 --
General Tolerance ~~ISO 2768-mK~~
Tolerance ~~ISO 8015~~
Surface ~~ISO 1302~~
Dimensions to be checked at approval

Dept./Name		Date/Signature
Author	L. MACHNA	
Checked	see SAP/EDM	
Approval	see SAP/EDM	

Modification No. --

SIEMENS
Medical Solutions

COVER_CENTER-IM

Part-No.	Doc-Type	Index	Rev.	Type-No.
5859058	EZG	01P-	B	-S050U

Scale 1:5
Drawing State Draft
- I-DEAS -
A1

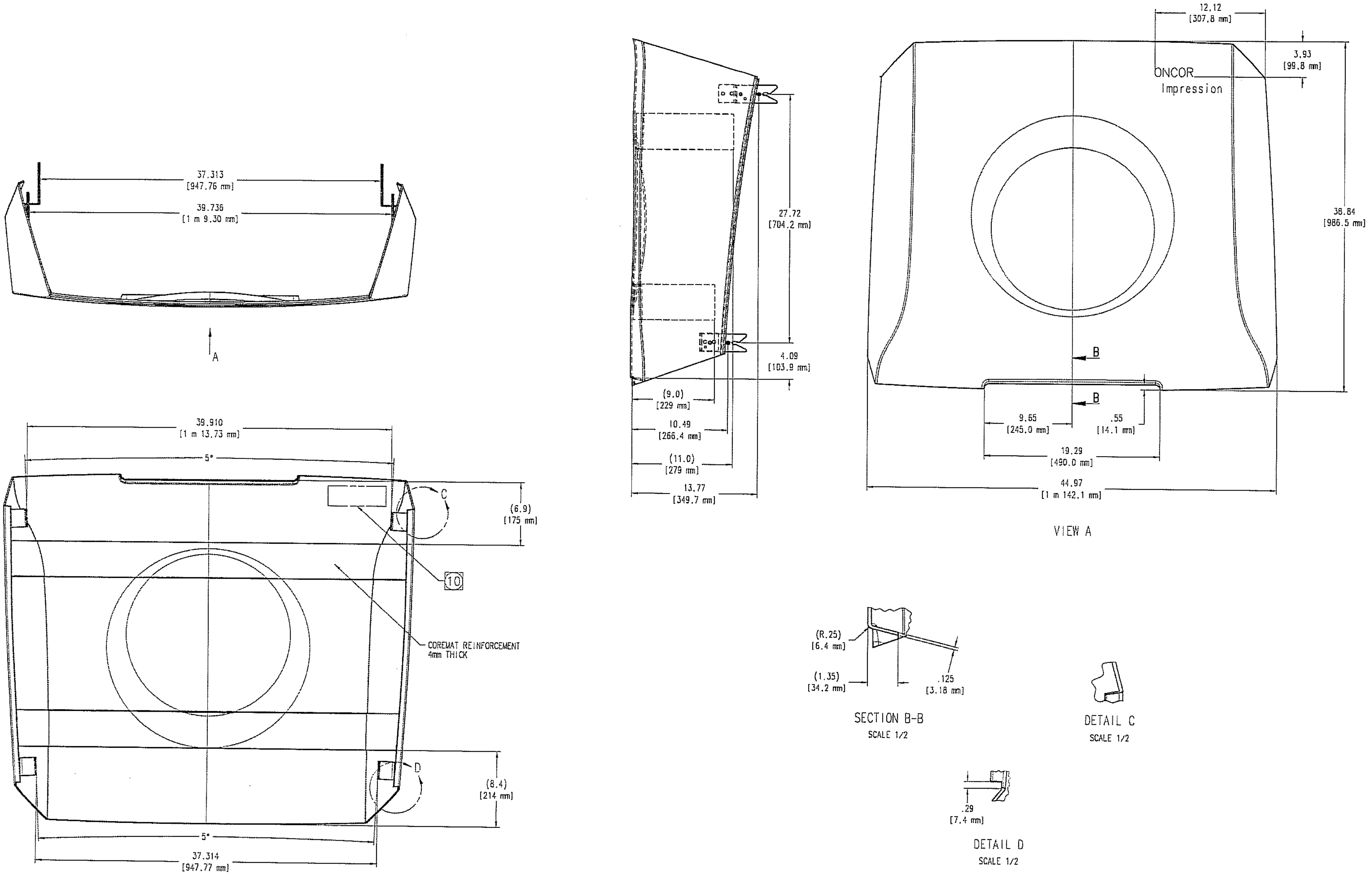
37.313
[947.76 mm]
39.736
[1 m 9.30 mm]
A
39.910
[1 m 13.73 mm]
5°
(6.9)
[175 mm]
C
10
COREMAT REINFORCEMENT
4mm THICK
D
(8.4)
[214 mm]
5°
37.314
[947.77 mm]
27.72
[704.2 mm]
4.09
[103.9 mm]
(9.0)
[229 mm]
10.49
[266.4 mm]
(11.0)
[279 mm]
13.77
[349.7 mm]
12.12
[307.8 mm]
3.93
[99.8 mm]
ONCOR
Impression
38.84
[986.5 mm]
B
B
9.65
[245.0 mm]
.55
[14.1 mm]
19.29
[490.0 mm]
44.97
[1 m 142.1 mm]
VIEW A
(R.25)
[6.4 mm]
(1.35)
[34.2 mm]
.125
[3.18 mm]
SECTION B-B
SCALE 1/2
DETAIL C
SCALE 1/2
.29
[7.4 mm]
DETAIL D
SCALE 1/2

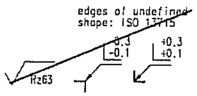
edges of undefined shape: ISO 13715
-0.3
-0.1
+0.3
+0.1
Rz63

Mod.-No.	Name	Date
--	--	--
--	--	--
--	--	--
--	--	--
--	--	--
--	--	--
	--	--

Modification History

UNLESS OTHERWISE SPECIFIED

- ☐ ELECTRICAL DWG PER ANSI Y32.2
- ☒ MECHANICAL DWG PER ANSI Y14.5
- ☐ WELD SYMBOLS PER ANSI A2.4
- ☐ SCREW THREAD PER ANSI Y14.6
- ☒ LEADING DIMENSIONS IN INCHES
- ☐ BREAK ALL SHARP EDGES .015 MAX.
- √ MAX. ALL MACHINED SURFACES PER ANSI B46.1

DECIMALS
.X ± --
.XX ± --
.XXX ± --
ANGLES
±---°

Material	— —
Part-No.	—
Surface	—
Surface-No.	—
Surface in m²	—
General Tolerance	~~ISO 2768-mK~~
Tolerance	~~ISO 8015~~
Surface	~~ISO 1302~~

Dimensions to be checked at approval

	Dept./Name	Date/Signature
Author	L. MACHNA	
Checked	see SAP/EDM	
Approval	see SAP/EDM	

Modification No. --

[redacted]

COVER_CENTER-IM

Part-No.	Doc-Type	Index	Rev.	Type-No.
5859058	EZG-	02M-	B	-S050U

Scale 1:5 | Drawing State Draft | • I-DEAS •

A1